GOODWE

User Manual

Grid-Tied PV Inverter

HT Series

(73-136kW)

V1.7-2025-07-10

Copyright ©GoodWe Technologies Co., Ltd., 2025. All rights reserved

No part of this manual can be reproduced or transmitted to the public platform in any form or by any means without the prior written authorization of GoodWe Technologies Co., Ltd.

Trademarks

GOODWE and other GoodWe trademarks are trademarks of GoodWe Company.
All other trademarks or registered trademarks mentioned in this manual are owned by GoodWe Technologies Co., Ltd.

Notice

The information in this user manual is subject to change due to product updates or other reasons. This manual cannot replace the product labels or the safety precautions unless otherwise specified. All descriptions in the manual are for guidance only.

CONTENT

1 About This Manual 1
1.1 Applicable Model 1
1.2 Target Audience 1
1.3 Symbol Definition 1

2 Safety Precaution 2
2.1 General Safety 2
2.2 DC Side 2
2.3 AC Side 3
2.4 Inverter Installation 3
2.5 Personal Requirements 4

3 Product Introduction 4
3.1 Application Scenarios 4
3.2 Circuit Diagram 4
3.3 Supported Grid Types 6
3.4 Appearance 7
3.4.1 Parts 7
3.4.2 Indicators 9
3.4.3 Nameplate 10
3.5 Functionalities 10

4 Check and Storage 11
4.1 Check Before Receiving 11
4.2 Deliverables 11
4.3 Storage 12

5 Installation 13
5.1 Installation Requirements 13
5.2 Inverter Installation 16
5.2.1 Moving the Inverter 16
5.2.2 Installing the Inverter 16

6 Electrical Connection 18
6.1 Safety Precautions 18
6.2 Connecting the PE Cable 20

6.3 Connecting the PV Input Cable 21
6.4 Connecting the AC Output Cable 24
6.5 Communication 26
6.5.1 Connecting the Communication Cable 26
6.5.2 Connecting the Remote Shutdown Communication Cable (Optional) 30
6.5.3 Connecting DRED Communication Cable (optional) 32
6.5.4 Installing the Communication Module (optional) 33
6.5.5 Installing PV Protection Cover (Optional) 34

7 Equipment Commissioning 35
7.1 Check Items before Switching Power ON 35
7.2 Power On 35

8 System Commissioning 36
8.1 Indicators and Button 36
8.2 Setting Inverter Parameters via LCD 37
8.3 Setting Inverter Parameters via App 40
8.4 Monitoring via SEMS Portal 40

9 Maintenance 41
9.1 Power Off the Inverter 41
9.2 Removing the Inverter 41
9.3 Disposing of the Inverter 41
9.4 Troubleshooting 42
9.5 Routine Maintenance 48

10 Technical Parameters 49

11 Term Explanation 55

1 About This Manual

This manual describes the product information, installation, electrical connection, commissioning, troubleshooting, and maintenance. Read through this manual before installing and operating the product. All the installers and users have to be familiar with the product features, functions, and safety precautions. This manual is subject to update without notice. For more product details and latest documents, visit www.en.goodwe.com.

1.1 Applicable Model

This manual applies to the listed inverters below (HT for short):

Model	Nominal Output Power	Nominal Output Voltage
GW73KLV-HT	73kW	220V, 3L/N/PE or 3L/PE
GW75K-HT	75kW	380V/400V, 3L/N/PE or 3L/PE*1
GW80K-HT	80kW	
GW100K-HT	100kW*2	400V, 3L/N/PE or 3L/PE*3
GW110K-HT	110kW	
GW120K-HT	120kW	
GW136K-HTH	136kW	500V , 3L/PE

*1: For Brazil Nominal Output Voltage (V): 380V, 3L/N/PE or 3L/PE.
*2: For Australia is 99.99kW/kVA.
*3: For Brazil Nominal Output Voltage (V): 380V, 3L/N/PE or 3L/PE.

1.2 Target Audience

This manual applies to trained and knowledgeable technical professionals. The technical personnel has to be familiar with the product, local standards, and electric systems.

1.3 Symbol Definition

Different levels of warning messages in this manual are defined as follows:

DANGER
Indicates a high-level hazard that, if not avoided, will result in death or serious injury.
WARNING
Indicates a medium-level hazard that, if not avoided, could result in death or serious injury.
CAUTION
Indicates a low-level hazard that, if not avoided, could result in minor or moderate injury.
NOTICE
Highlight and supplement the texts. Or some skills and methods to solve product-related problems to save time.

2 Safety Precaution

WARNING

The inverters are designed and tested strictly to comple with related safety rules. Read and follow all the safety instructions and cautions before any operations. Improper operation might cause personal injury or property damage as the inverters are electrical equipment.

2.1 General Safety

Notice

- The information in this document is subject to change due to product updates or other reasons. This manual cannot replace the product labels or the safety precaution unless otherwise specified. All descriptions here are for guidance only.
- Before installations, read through the user manual to learn about the product and the precautions.
- All installations should be performed by trained and knowledgeable technicians who are familiar with local standards and safety regulations.
- Use insulating tools and wear personal protective equipment when operating the equipment to ensure personal safety. Wear anti-static gloves, cloths, and wrist strips when touching electron devices to protect the inverter from damage.
- Strictly follow the installation, operation, and configuration instructions in this manual. The manufacturer shall not be liable for equipment damage or personal injury if you do not follow the instructions. For more warranty details, visit https://en.goodwe.com/warranty.asp.

2.2 DC Side

DANGER

- Connect the DC cables using the delivered DC connectors and terminals. The manufacturer shall not be liable for the equipment damage if other connectors or terminals are used.
- Confirm the following information before connecting the PV string to the inverter. Otherwise, the inverter may be damaged permanently or even cause fire and cause personal and property losses. Above damage or injuries are not covered by the warranty.
  - Make sure that the positive pole of the PV string connects to the PV+ of the inverter. And the negative pole of the PV string connects to the PV- of the inverter.
  - For the models of GW75K-HT, GW80K-HT, GW100K-HT, GW110K-HT, GW120K-HT, GW136K-HTH, the open circuit voltage of the PV string connected to each MPPT shall not exceed 1100V. When the input voltage is between 1000V and 1100V, the inverter enters the waiting mode. When the voltage returns to 180V-1000V, the inverter will resume normal operation.
  - For the models of GW73KLV-HT, the open circuit voltage of the PV string connected to each MPPT shall not exceed 800V.

WARNING

- Ensure that the PV module frames and the PV mounting system are securely grounded.
- Ensure that the DC cables are connected tightly and securely.
- The PV modules used with the inverter must have an IEC61730 class A rating.
- Make sure that the PV strings connected to the same MPPT should contain the same number of identical PV modules.
- To maximize the power generation of the inverter, please ensure that the Vmp of the PV modules connected in series is within the MPPT Voltage Range at Nominal Power of the inverter, as shown in the **Technical Parameters**.
- Make sure that the voltage difference between two MPPTs shall be less than 150 V.
- Make sure that the input current of each MPPT does not exceed the Max. Input Current per MPPT, as shown in the the **Technical Parameters**.
- When there are multiple PV string inputs, please connect them to as much inverter MPPTs as possible.

2.3 AC Side

WARNING

- The voltage and frequency at the connecting point should meet the on-grid requirements.
- An additional protective device like the circuit breaker or fuse is recommended on the AC side. Specification of the protective device should be at least 1.25 times the Max. output current.
- You are recommended to use copper cables as AC output cables. If you prefer aluminum cables, remember to use copper to aluminum adapter terminals.

2.4 Inverter Installation

DANGER

- Terminals at the bottom of the inverter cannot bear much load. Otherwise, the terminals will be damaged.
- All labels and warning marks must be clear and distinct after the installation. Do not block, alter, or damage any label.
- Warning labels on the inverter are as follows.

	HIGH VOLTAGE HAZARD. Disconnect all incoming power and turn off the product before working on it.	5min	Delayed discharge. Wait 5 minutes after power off until the components are completely discharged.
	Read through the guide before working on this device.		Potential risks exist. Wear proper PPE before any operations.
	High-temperature hazard. Do not touch the product under operation to avoid being burnt.		Grounding point. Indicates the position for connecting the PE cable.
CE	CE marking		Do not dispose of the inverter as household waste.Discard the product in compliance with local laws and regulations, or send it back to the manufacturer.

2.5 Personal Requirements

NOTICE

- Personnel who install or maintain the equipment must be strictly trained, learn about safety precautions and correct operations.
- Only qualified professionals or trained personnel are allowed to install, operate, maintain, and replace the equipment or parts.

3 Product Introduction

3.1 Application Scenarios

The HT inverter is a three-phase PV string grid-tied inverter. The inverter converts the DC power generated by the PV module into AC power and feeds it into the utility grid. The intended use of the inverter is as follows:

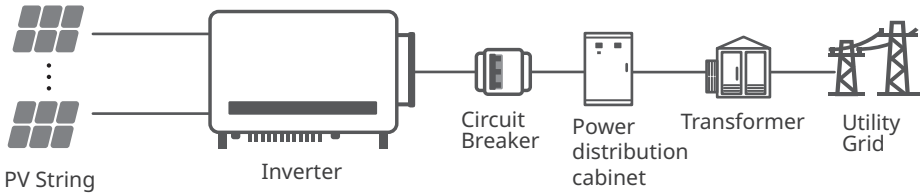

NOTICE

This series of products is suitable for commercial/industrial product use scenarios.

3.2 Circuit Diagram

The circuit diagram of GW75K-HT/GW80K-HT/GW100K-HT is as follows.

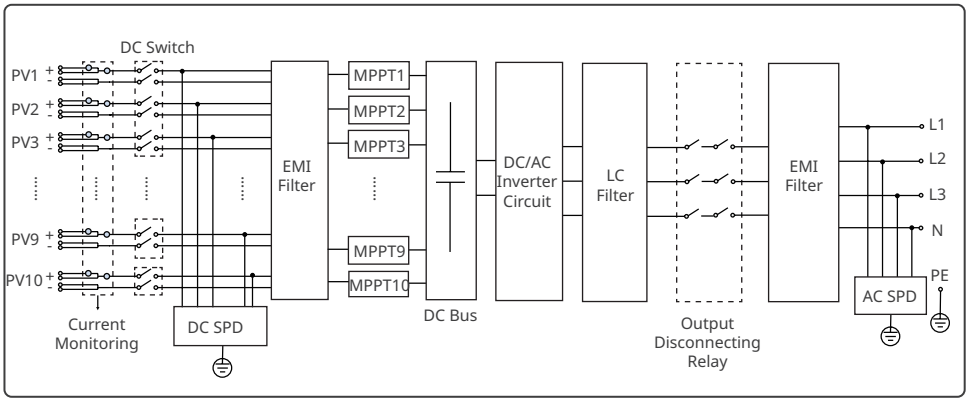

The circuit diagram of GW73KLV-HT/GW110K-HT/GW120K-HT is as follows.

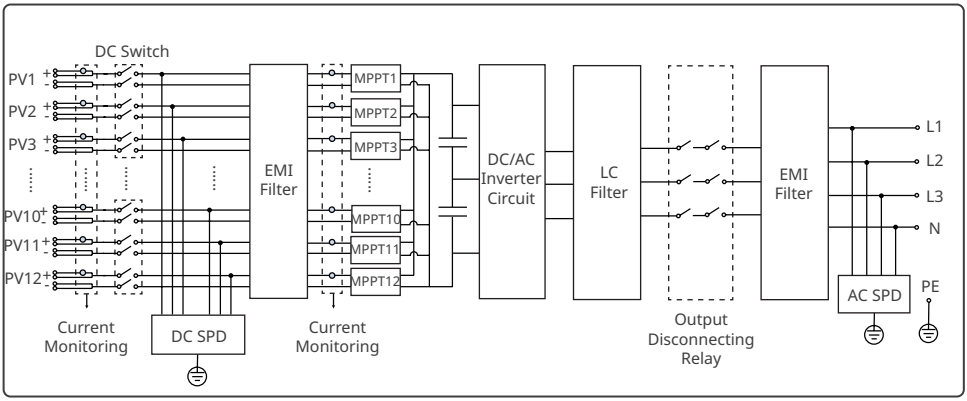

The circuit diagram of GW136K-HTH is as follows.

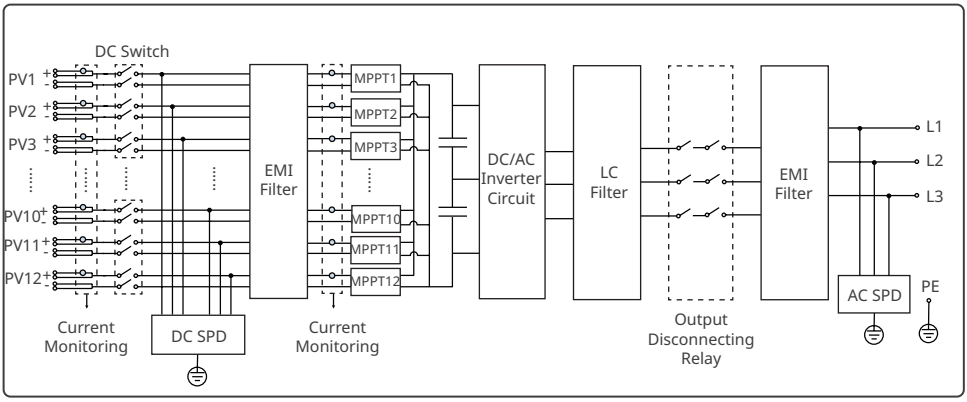

3.3 Supported Grid Types

NOTICE
• For the TT grid structure, the effective value of the voltage between the neutral wire and the ground wire must be less than 20V.

The grid structures supported by GW73KLV-HT, GW75K-HT, GW80K-HT, GW100K-HT, GW110K-HT, GW120K-HT are TN-S, TN-C,TN-C-S, TT, IT, as shown in the figure below:

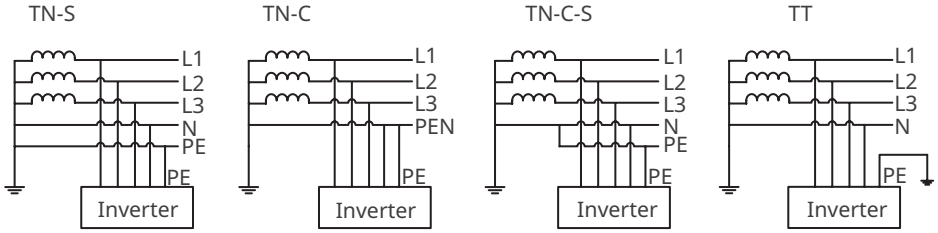

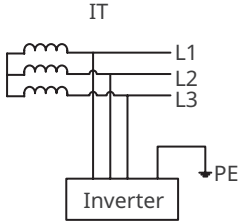

The grid structures supported by GW136K-HTH is IT, as shown in thediagram below:

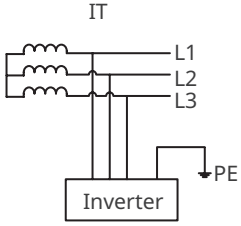

3.4 Appearance

3.4.1 Parts

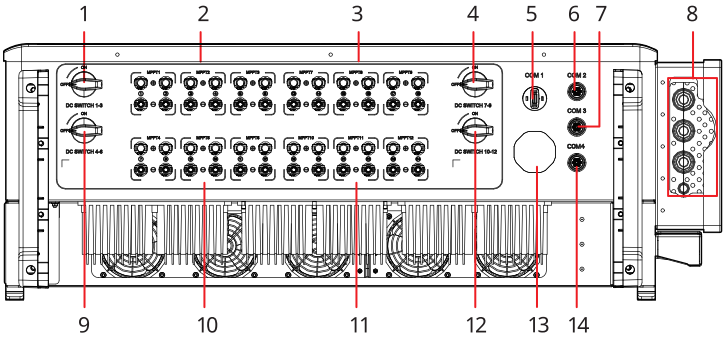

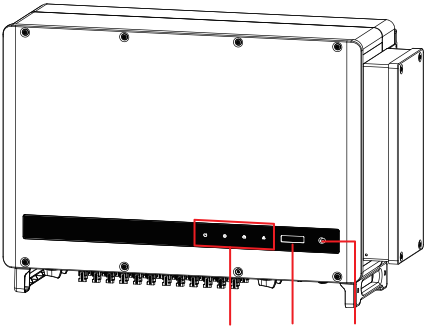

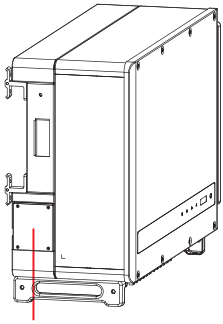

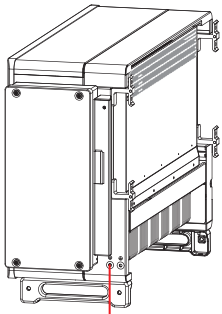

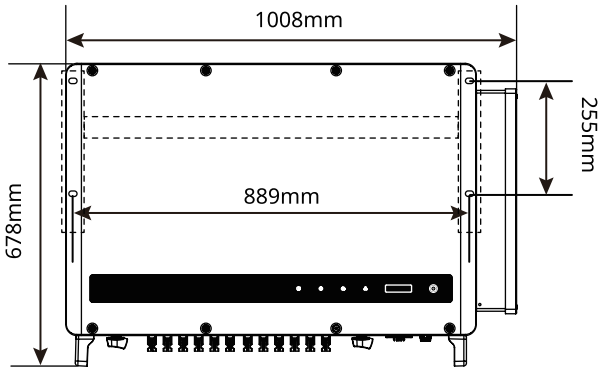

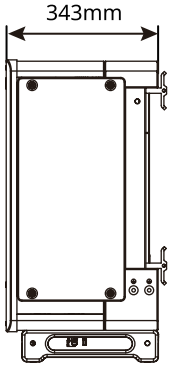

No.	Parts	Description
1	DC Switch 1-3	Start or stop 1-3 DC input.
2	PV Input Terminal 1-3 (Controlled by DC Switch 1-3)	Used to connect the PV module DC input cables.
3	PV Input Terminal 7-9 (Controlled by DC Switch 7-9)	Used to connect the PV module DC input cables.
4	DC Switch 7-9	Start or stop 7-9 DC input.
5	Communication Port	Used to connect communication modules like Bluetooth, WiFi, GPRS, 4G, etc.
6	RS485 Communication Port (COM2)	Used to connect RS485 communication cable, supporting connecting to other inverters or smart DataLogger.
7	Remote Shutdown or DRED communication Port (COM3)	Used to connect the Remote Shutdown or DRED communication cable.
8	AC Cable Outlet Hole	-
9	DC Switch 4-6	Start or stop 4-6 DC input.
10	PV Input Terminal 4-6 (Controlled by DC Switch 4-6)	Used to connect the PV module DC input cables.
11[a]	PV Input Terminal 10-12 (Controlled by DC Switch 10-12)	Used to connect the PV module DC input cables.
12	DC Switch 10-12	Start or stop 10-12 DC input.
13	Ventilation valve	-
14	RS485 communication Port (COM4) (optional)	Optional. Used to connect RS485 communication cable, supporting connecting the smart meter.
15	Indicator	Indicates working state of the inverter.
16	LCD (optional)	Optional. Used to check the parameters of the inverter.
17	Button(optional)	Optional. Used to control contents displayed on the screen.
18	Fan	Used to cool the inverter.
19	Grounding Point	Used to connect the PE cable.

[a]. The number of PV terminals varies depending on the different inverters. The actual accessories may differ.

3.4.2 Indicators

Indicator	Status	Description
		ON = EQUIPMENT POWER ON
		OFF = EQUIPMENT POWER OFF
		ON = THE INVERTER IS FEEDING POWER
		OFF = THE INVERTER IS NOT FEEDING POWER
		SINGLE SLOW FLASH = SELF CHECK BEFORE CONNECTING TO THE GRID
		SINGLE FLASH = CONNECTING TO THE GRID
		ON = WIRELESS IS CONNECTED/ACTIVE
		BLINK 1 = WIRELESS SYSTEM IS RESETTING
		BLINK 2 = WIRELESS ROUTER NOT CONNECTED
		BLINK 4 = WIRELESS SERVER PROBLEM
		BLINK = RS485 IS CONNECTED
		OFF = WIRELESS IS NOT ACTIVE
		ON = A FAULT HAS OCCURRED
		OFF = NO FAULT

3.4.3 Nameplate

The nameplate is for reference only.

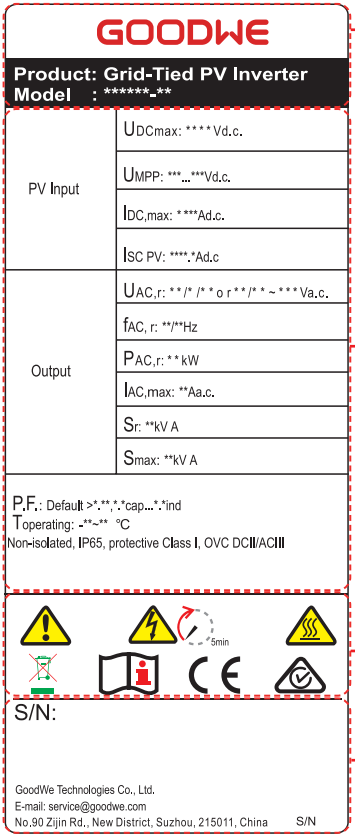

Goodwe trademark, product type, and product model

Technical parameters

Safety symbols and certification marks

Contact information and serial number

3.5 Functionalities

PID Recovery (Optional)

During the operation of PV panels, there is a potential difference between the output electrodes and the grounded frame of the panels. Over an extended period, this can lead to a decrease in the power generation efficiency of the panels, which is known as the Potential Induced Degradation (PID) effect.

The PID function of this unit operates by elevating the voltage differential between the PV panels and their frames to a positive value (termed as positive-voltage elevation). This effectively suppresses the PID effect and is applicable to P - type PV panels as well as N-type PV panels that necessitate positive - voltage elevation for PID suppression. For N - type PV panels that demand negative - voltage reduction to suppress the PID effect, it is advisable to deactivate this function. Regarding whether an N - type module falls into the category that requires positive - voltage elevation for PID suppression, please consult the module supplier.

4 Check and Storage

4.1 Check Before Receiving

Check the following items before receiving the product.

1. Check the outer packing box for damage, such as holes, cracks, deformation, and others signs of equipment damage. Do not unpack the package and contact the supplier as soon as possible if any damage is found.
2. Check the inverter model. If the inverter model is not what you requested, do not unpack the product and contact the supplier.
3. Check the deliverables for correct model, complete contents, and intact appearance. Contact the supplier as soon as possible if any damage is found.

4.2 Deliverables

NOTICE
• The number of PV connectors and the PV terminals in the inverter is the same. • The type and number of the communication connector are decided by the selected communication method. • Communication module types: WiFi, 4G etc. The actual module delivered depends on the communication method of the selected inverter. • The number of expansion bolts, screws, pin terminals are various depending on different inverters. The actual accessories may differ. • The Unlock tool: optional. • The RS485-USB cable will only be delivered in Brazil. • Handles: Optional.

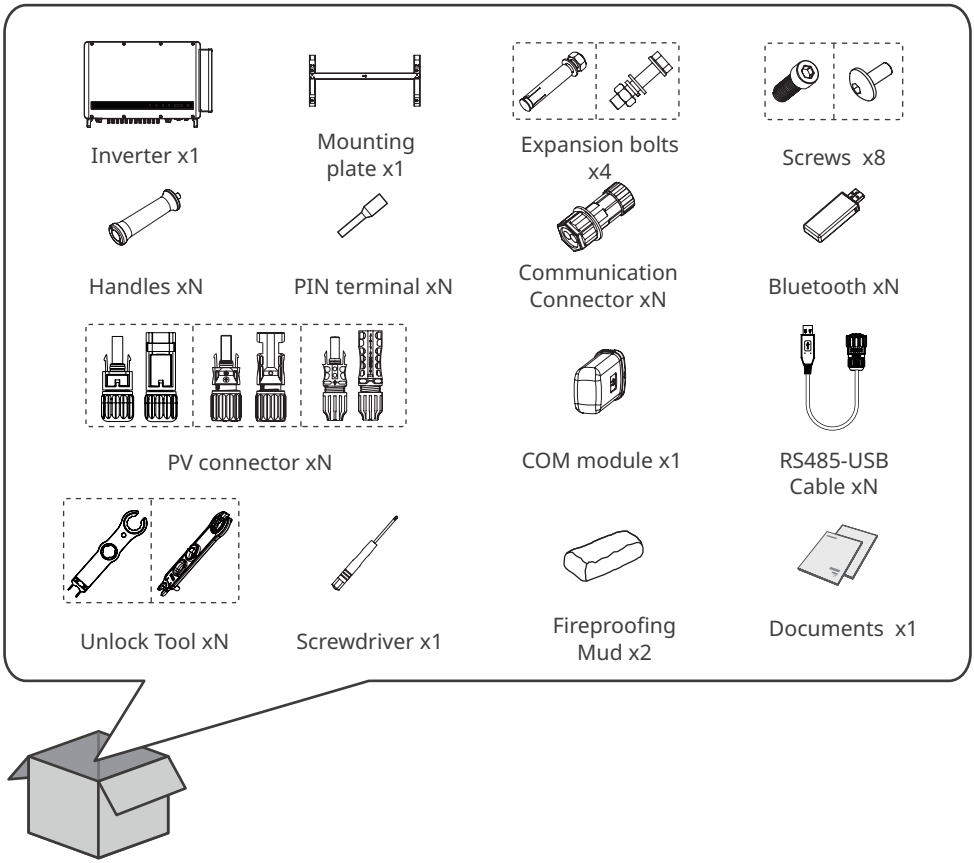

4.3 Storage

If the equipment is not to be installed or used immediately, please ensure that the storage environment meets the following requirements:

1. Do not unpack the outer package or throw the desiccant away.
2. Store the equipment in a clean place. Make sure the temperature and humidity are appropriate and no condensation.
3. Follow the instructions on the packing box when stacking the inverters. Stack with caution to prevent them from falling over.
4. If the inverter has been long term stored, it should be checked by professionals before being put into use.
5. If the inverter has been stored for more than two years or has not been in operation for more than six months after installation, it is recommended to be inspected and tested by professionals before being put into use.
6. To ensure good electrical performance of the internal electronic components of the inverter, it is recommended to power it on every 6 months during storage. If it has not been powered on for more than 6 months, it is recommended to to be inspected and tested by professionals before being put into use.

5 Installation

5.1 Installation Requirements

Installation Environment Requirements

1. Do not install the equipment in a place near flammable, explosive, or corrosive materials.
2. Install the equipment on a surface that is solid enough to bear the inverter weight.
3. Install the equipment in a well-ventilated place to ensure good dissipation. Also, the installation space should be large enough for operations.
4. The equipment with a high ingress protection rating can be installed indoors or outdoors. The temperature and humidity at the installation site should be within the appropriate range.
5. Install the equipment in a sheltered place to avoid direct sunlight, rain, and snow. Build a sunshade if it is needed.
6. Do not install the equipment in a place that is easy to touch, especially within children's reach. High temperature exists when the equipment is working. Do not touch the surface to avoid burning.
7. Install the equipment at a height that is convenient for operation and maintenance, electrical connections, and checking indicators and labels.
8. Install the inverters far away from noise-sensitive areas, such as the residential area, school, hospital etc., in order to avoid the noises bothering people nearby.
9. Install the inverter away from high magnetic field to avoid electromagnetic interference.If there is any radio or wireless communication equipment below 30MHz near the inverter, you have to:
   - Install the inverter at least 30m far away from the wireless equipment.
   - Add a low pass EMI filter or a multi winding ferrite core to the DC input cable or AC output cable of the inverter.

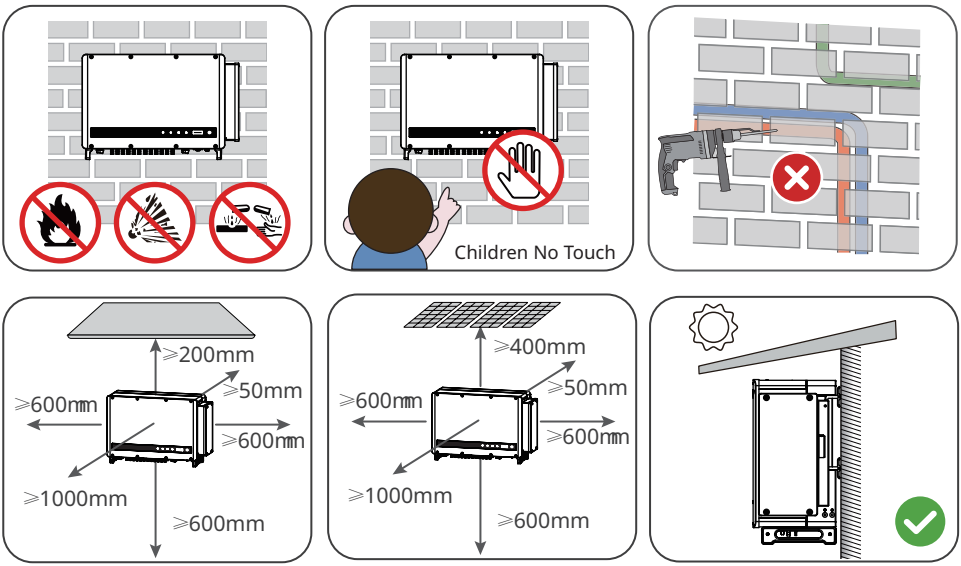

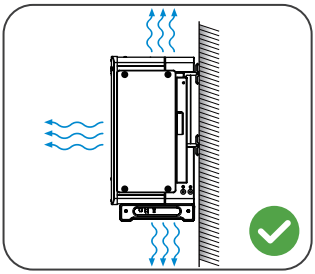

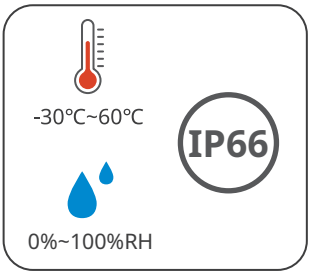

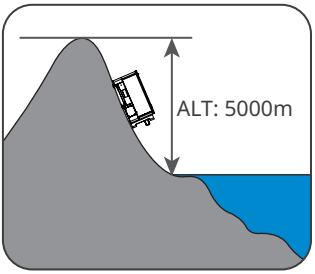

Mounting Support Requirements

1. The mounting support shall be nonflammable and fireproof.
2. Make sure that the support surface is solid enough to bear the product weight load.

Installation Angle Requirements

- Install the inverter vertically or at a maximum back tilt of 25 degrees.
- Do not install the inverter upside down, forward tilt, back forward tilt, or horizontally.

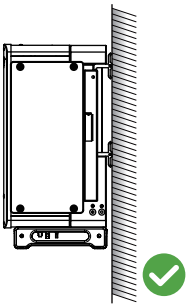

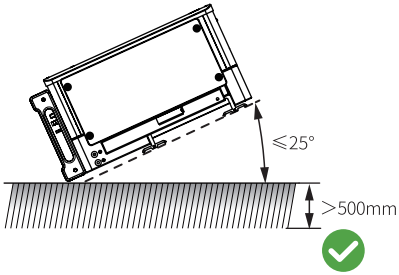

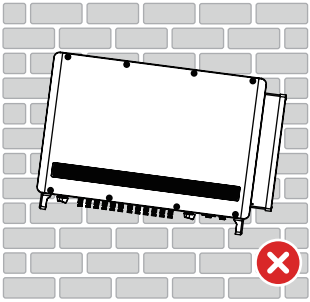

Installation Tool Requirements

The following tools are recommended when installing the equipment. Use other auxiliary tools on site if necessary.

5.2 Inverter Installation

5.2.1 Moving the Inverter

CAUTION

Move the inverter to the site before installation. Follow the instructions below to avoid personal injury or equipment damage.

1. Consider the weight of the equipment before moving it. Assign enough personnel to move the equipment to avoid personal injury.
2. Wear safety gloves to avoid personal injury.
3. Keep balance when moving the equipment.

5.2.2 Installing the Inverter

NOTICE

- Avoid the water pipes and cables buried in the wall when drilling holes.
- Wear goggles and a dust mask to prevent the dust from being inhaled or contacting eyes when drilling holes.
- If you need to use the handles or hoisting rings, please contact after-sale service for purchase.

Step 1 Put the mounting plate on the wall horizontally and mark positions for drilling holes. (Contact the local sales center to purchase the bracket)
Step 2 Drill holes to a depth of 65mm using the hammer drill. The diameter of the drill bit should be 13mm.
Step 3 Fix the mounting plate on the wall or the bracket.
Step 4 Install the handles or the hoisting rings. Grab the handles to lift the inverter or hoist the inverter to place it on the mounting plate.
Step 5 Tighten the nuts to secure the mounting plate and the inverter.

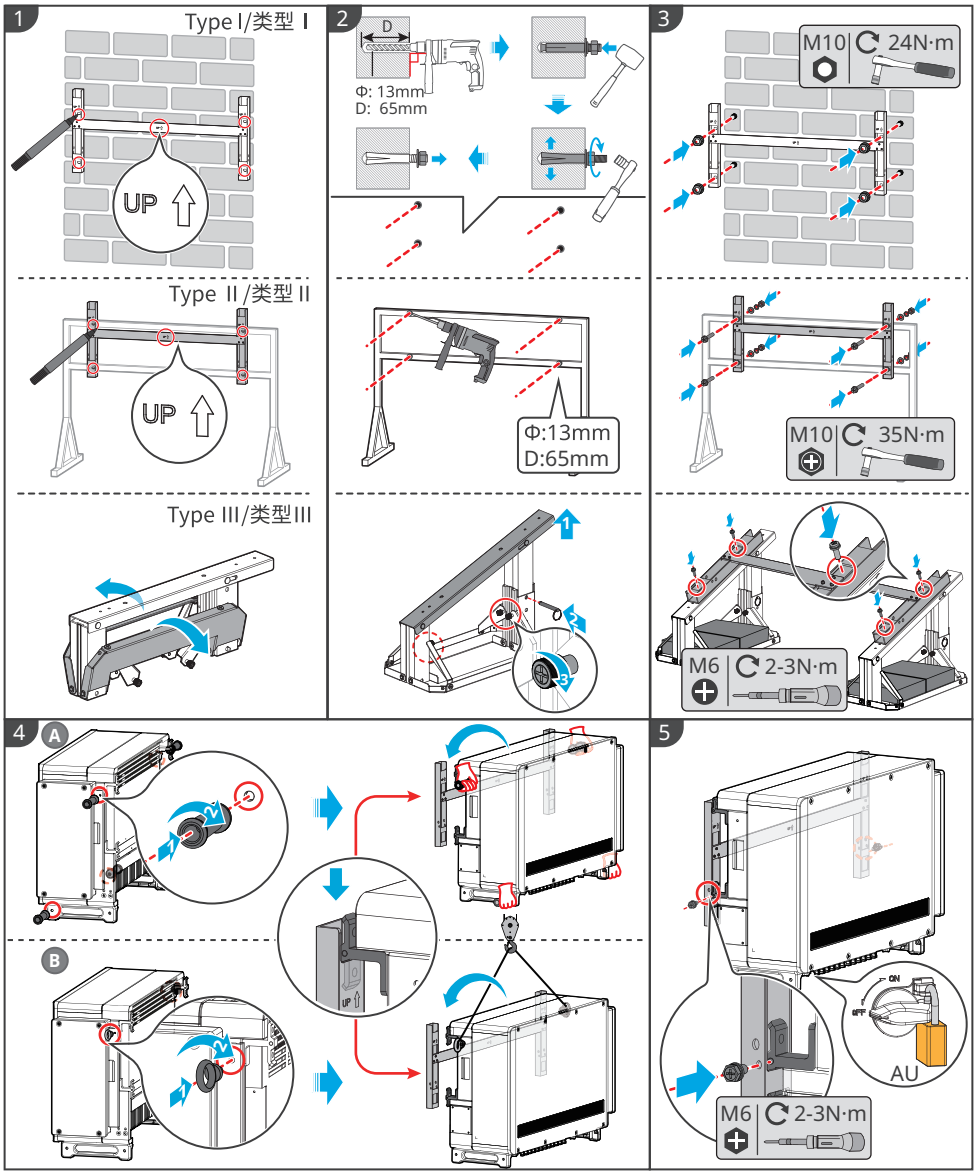
1
Type I/类型 I
UP
Type II/类型 II
UP
Type III/类型III
2
D
Φ: 13mm
D: 65mm
Φ:13mm
D:65mm
1
2
3
3
M10 24N·m
M10 35N·m
M6 2-3N·m
4
A
B
UP
5
ON
OFF
AU
M6 2-3N·m

6 Electrical Connection

6.1 Safety Precautions

DANGER

- Disconnect the DC switch and the AC output switch of the inverter to power off the equipment before any electrical connections. Do not work with power on. Otherwise, an electric shock may occur.
- Perform electrical connections in compliance with local laws and regulations. Including operations, cables, and component specifications.
- If the tension is too large, the cable may be poorly connected. Reserve a certain length of the cable before connecting it to the inverter cable port.

NOTICE

- Wear personal protective equipment like safety shoes, safety gloves, and insulating gloves during electrical connections.
- All electrical connections should be performed by qualified professionals.
- Cable colors in this document are for reference only. The cable specifications should meet local laws and regulations.

No.	Cable	Type	Cable Specification
1	PE cable	Outdoors cable	Conductor cross sectional area $S_{PE} \geq S/2$
2	DC input cable	PV cable that meets 1100V standard.	• Conductor cross sectional area: 4~6mm^2 • Cable outer diameter: 5.5mm~8mm
3	AC output cable (multi-core)	Multi-core outdoor cable	• Cable outer diameter: 22mm~67mm • Copper core cable conductor cross sectional area: $70 \leq S \leq 240$mm^2 • Aluminum alloy cable or copper-clad aluminum cable conductor cross sectional area: $95 \leq S \leq 240$mm^2 • Conductor cross sectional area $S_{PE} \geq S/2$
4	AC output cable (single core)	Single-core outdoor cable	• Cable outer diameter: 11mm~35mm • Copper core cable conductor cross sectional area: $70 \leq S \leq 240$mm^2 • Aluminum alloy cable or copper-clad aluminum cable conductor cross sectional area: $95 \leq S \leq 240$mm^2 • Conductor cross sectional area $S_{PE} \geq S/2$

5	RS485 communication cable	Outdoor shielded twisted pair. The cable should meet local requirements.	Cable Length: 1000m
6	Remote Shutdown Cable	Outdoor shielded twisted pair. The cable should meet local requirements.	N/A
Note: The values in this table are valid only if the external protective earthing conductor is made of the same metal as the phase conductors. Otherwise, the cross-sectional area of the external protective earthing conductor is to be determined in a manner which produces a conductance equivalent to that which results from the application of this table.			

6.2 Connecting the PE Cable

WARNING

- The PE cable connected to the enclosure of the inverter cannot replace the PE cable connected to the AC output port. Both of the two PE cables must be securely connected.
- Make sure that all the grounding points on the enclosures are equipotential connected when there are multiple inverters.
- To improve the corrosion resistance of the terminal, it is recommended to apply silica gel or paint on the ground terminal after installing the PE cable.
- The PE cable should be prepared by customers.
- M8 ground OT terminals should be prepared by customers.
- Other sizes of grounding cables that meet local standards and safety regulations can also be used for grounding connections. But GOODWE shall not be held liable for any damage caused.

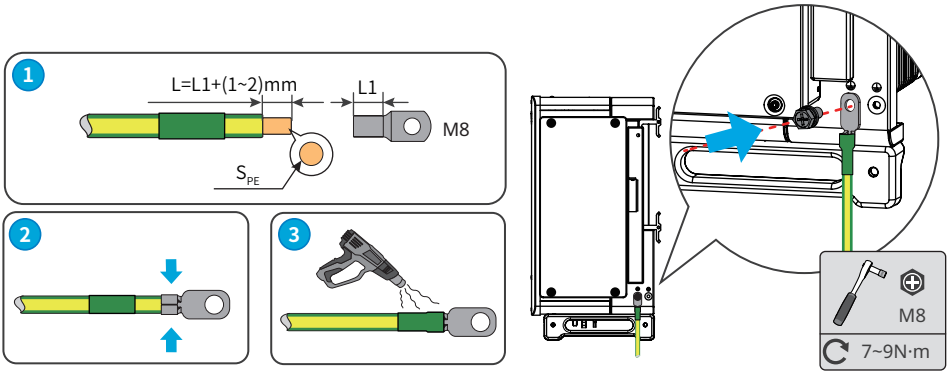

6.3 Connecting the PV Input Cable

DANGER

- Do not connect the same PV string to multiple inverters, as this may cause damage to the inverter.
- Confirm the following information before connecting the PV string to the inverter. Otherwise, the inverter may be damaged permanently or even cause fire and cause personal and property losses. Above damage or injuries are not covered by the warranty.
  - Make sure that the positive pole of the PV string connects to the PV+ of the inverter. And the negative pole of the PV string connects to the PV- of the inverter.
  - For the models of GW75K-HT, GW80K-HT, GW100K-HT, GW110K-HT, GW120K-HT, GW136K-HTH, the open circuit voltage of the PV string connected to each MPPT shall not exceed 1100V. When the input voltage is between 1000V and 1100V, the inverter enters the waiting mode. When the voltage returns to 180V-1000V, the inverter will resume normal operation.
  - For the models of GW73KLV-HT, the open circuit voltage of the PV string connected to each MPPT shall not exceed 800V.

WARNING

- Connect the DC cables using the delivered PV connectors. The manufacturer shall not be liable for the damage if other connectors are used.
- The PV strings cannot be grounded. Ensure the minimum isolation resistance of the PV string to the ground meets the minimum isolation resistance requirements before connecting the PV string to the inverter.
- The DC input cable should be prepared by customers.

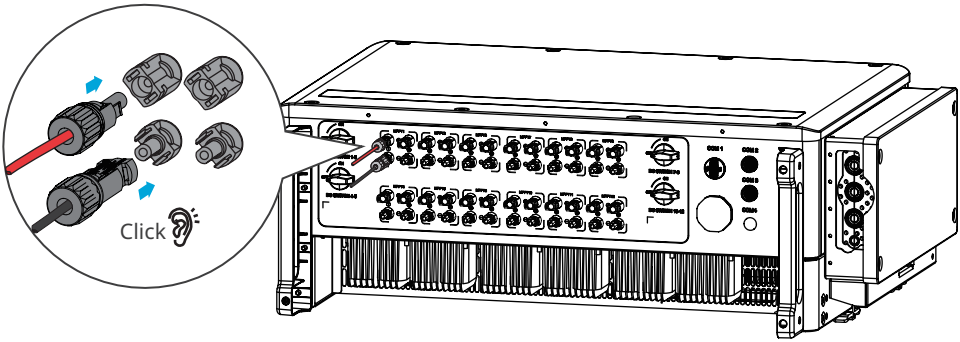

NOTICE

Seal the PV input terminals using waterproof covers when they are not to be used. Otherwise, the ingress protection rating will be influenced.

Connecting the DC Input Cable

Step 1 Prepare DC cables.

Step 2 Crimp the crimp contacts.

Step 3 Disassemble the PV connectors.

Step 4 Make the DC cable and detect the DC input voltage.

Step 5 Plug the PV connectors into the PV terminals.

Vaconn DC Connector

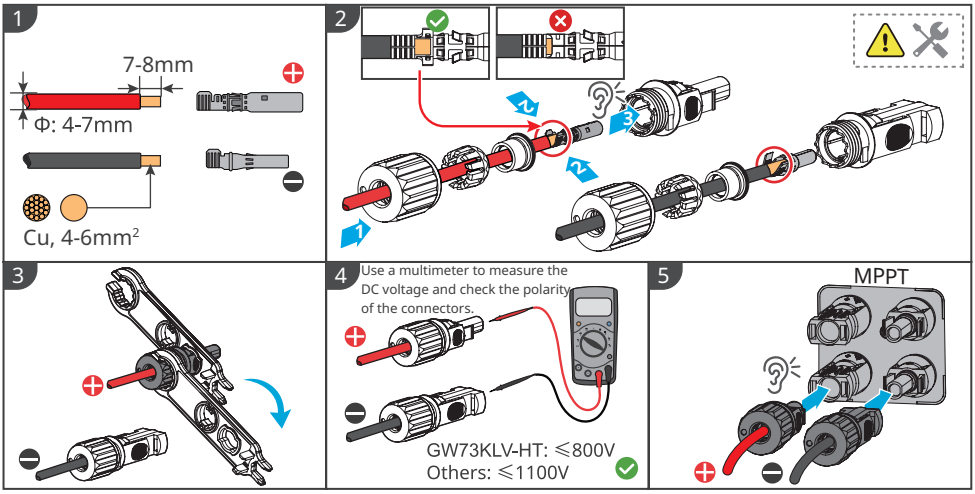

QC4.10 DC Connector

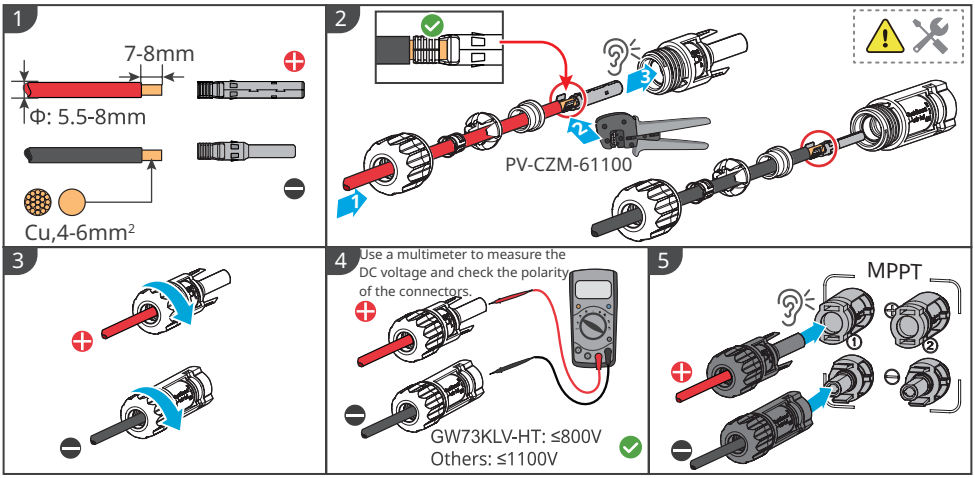

MC4 DC Connector

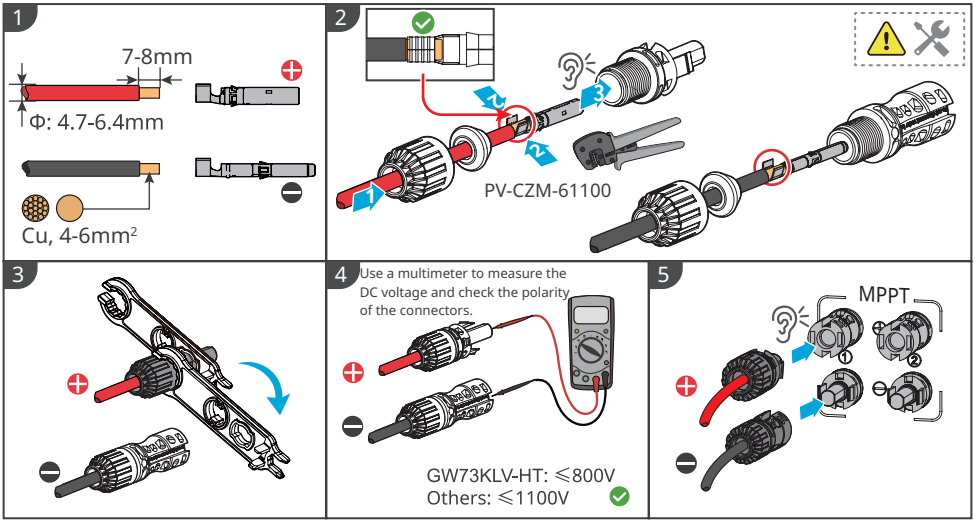

6.4 Connecting the AC Output Cable

WARNING

Do not connect loads between the inverter and the AC switch directly connected to it.

Select and Install RCD depending on local laws and regulations. Type A RCDs (Residual Current Monitoring Device) can be connected to the outside of the inverter for protection when the DC component of the leakage current exceeds the limit value. The following RCDs are for reference:

Inverter model	Recommended RCD specifications
GW73KLV-HT	730mA or higher
GW75K-HT	750mA or higher
GW80K-HT	800mA or higher
GW100K-HT	1000mA or higher
GW110K-HT	1100mA or higher
GW120K-HT	1200mA or higher
GW136K-HTH	1360mA or higher

An AC circuit breaker should be installed on the AC side to make sure that the inverter can safety disconnect the grid when an exception happens. Select the appropriate AC circuit breaker in compliance with local laws and regulations. Recommended AC circuit breakers:

Inverter model	AC circuit breaker
GW75K-HT/GW80K-HT/GW100K-HT	200A
GW110K-HT	250A
GW73KLV-HT/GW120K-HT	250A
GW136K-HTH	225A

NOTICE

Install one AC circuit breaker for each inverter. Multiple inverters cannot share one AC circuit breaker.

WARNING

- Pay attention to the silkscreens L1, L2, L3, N, PE on the AC terminal. Connect the AC cables to the corresponding terminals. The inverter may be damaged if the cables are connected inappropriately.
- Make sure that the whole cable cores are inserted into the AC terminal holes. No part of the cable core can be exposed.
- Make sure that the cables are connected securely. Otherwise, the terminal may be too hot to damage the inverter when the inverter is working.
- Three-phase four-wire or three-phase five-wire cables can be connected to the AC terminals. The actual wiring method may be different. The figure below takes the three-phase five-wire as an example.
- The waterproof rubber ring for the AC outlet hole is delivered with the inverter, which is located in the AC junction box of the inverter. Please select the rubber ring types according to the actual using cables' specification.
- Reserve certain length of PE cable. Make ensure that the PE cable is the last one to bear the stress when the AC output cable is under tension.
- M8 ground OT terminals and M12 AC OT terminals should be prepared by customers.

Step 1 Make the AC output cable.
Step 2 Dismantle the AC cover and take out the rubber ring.
Step 3 Cut the rubber ring to right size.
Step 4 Crimp the AC cable OT terminal
Step 5 Connect the AC output cables and install the cover.

Multi-core cable:

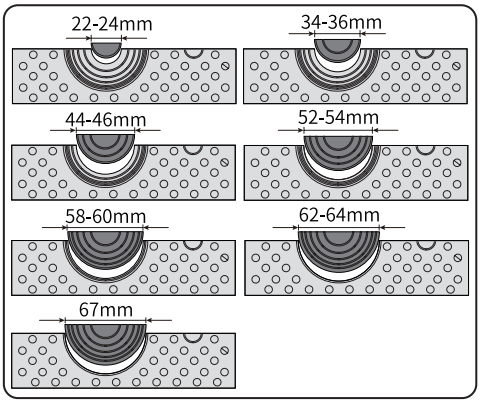

Single-core cable

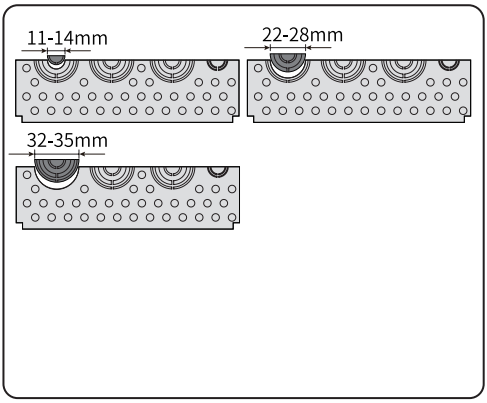

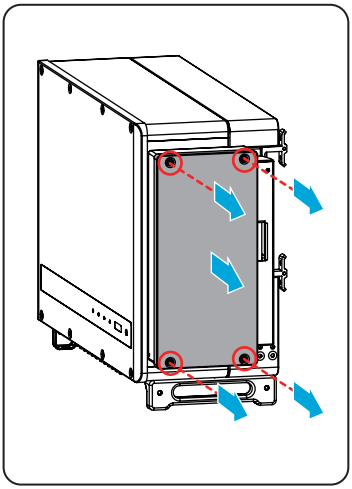

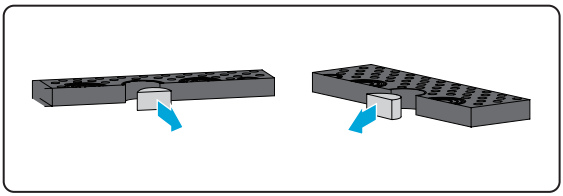

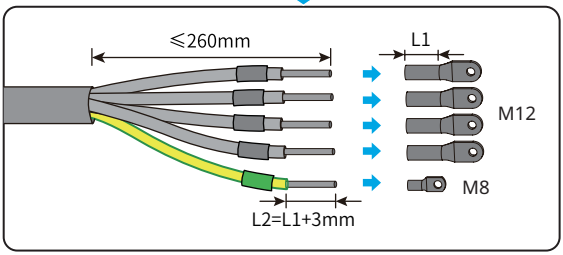

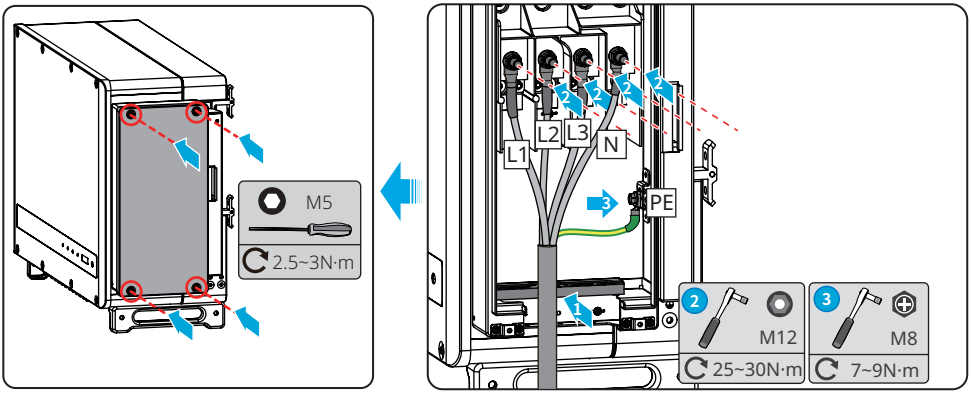

NOTICE

- Make sure that the cables are connected correctly and firmly after connections. Clean all the debris in the maintenance compartment.
- Seal the AC output terminal to ensure the Ingress Protection Rating.

6.5 Communication

NOTICE

- Make sure that the communication device is connected to the right COM port.
- Route the communication cable far away from any interference source or power cable to prevent the signal from being influenced.
- GW136K-HTH Inverter has generation/export limit control functionality but is not tested to AS/NZS 4777.2:2020.

Power limit networking scenario

6.5.1 Connecting the Communication Cable

Communication Type	COM Port	Port Definition	Function Description
RS485	COM2	1: RS485_A1 2: RS485_B1 3: RS485_A1 4: RS485_B1 5: shield layer grounding 6: shield layer grounding	Used to connect the RS485 port of other inverters , EzLogger Pro. Ezlogger3000C, or SEC1000.
	COM4 (optional)	1: RS485_A2 2: RS485_B2 3: RS485_A2 4: RS485_B2 5: shield layer grounding 6: shield layer grounding	Used to connect the smart meter to perform the power limit function.

Power limit networking scenario (SEC1000)

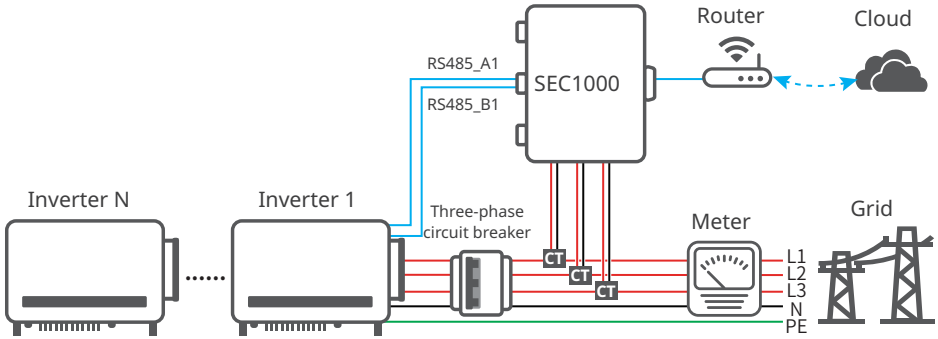

Power limit networking scenario (GM3000C optional)

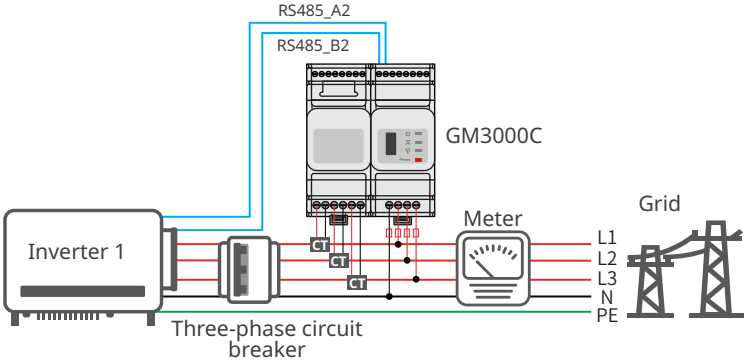

After completing cable connections, set related parameters via LCD or SolarGo app to enable export power limit control or output power limit control.

RS485 networking scenario

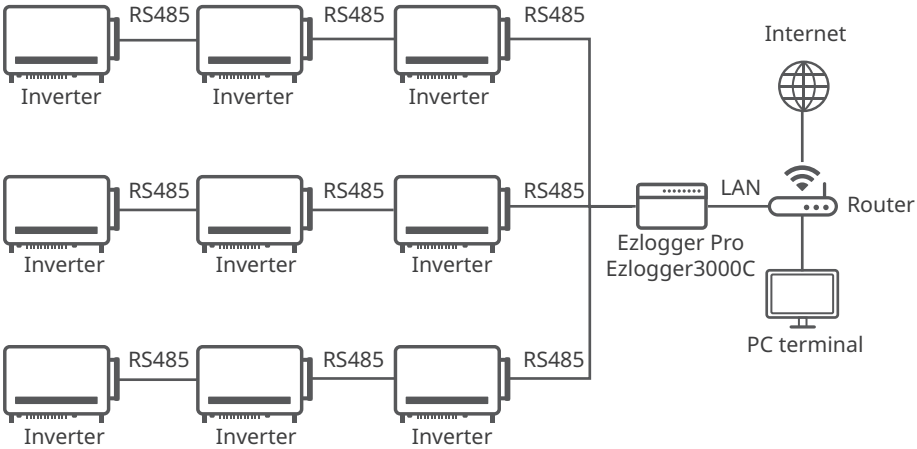

Ezlink networking scenario

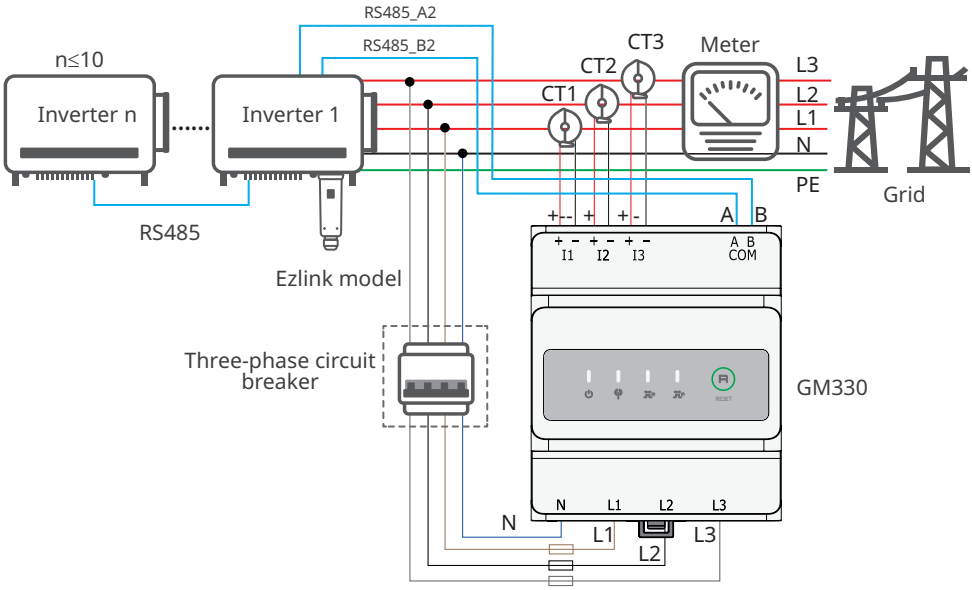

Connecting the RS485 Communication Cable

NOTICE
Connect the RS485 cable using a 6PIN communication terminal as follows.

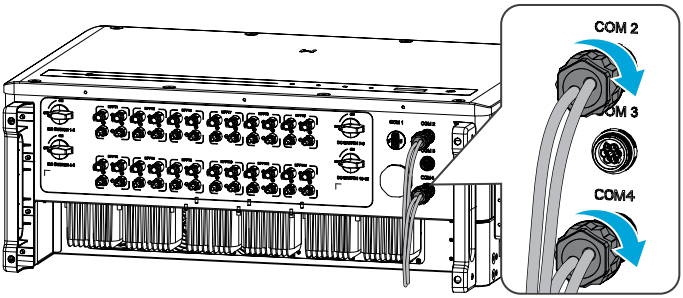

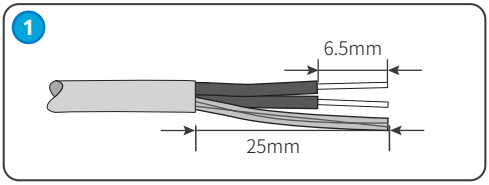

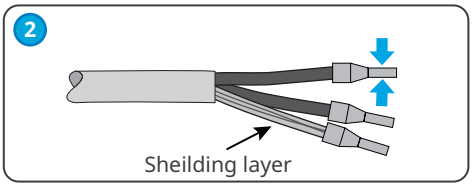

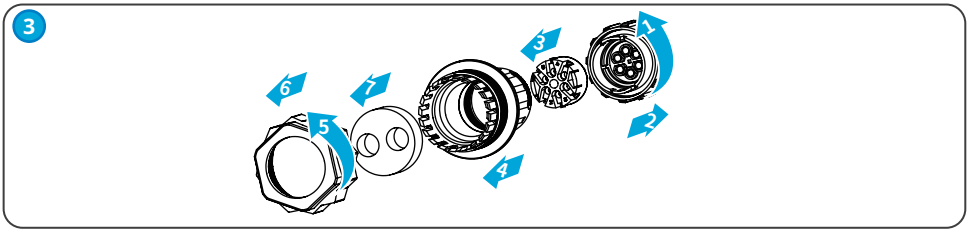

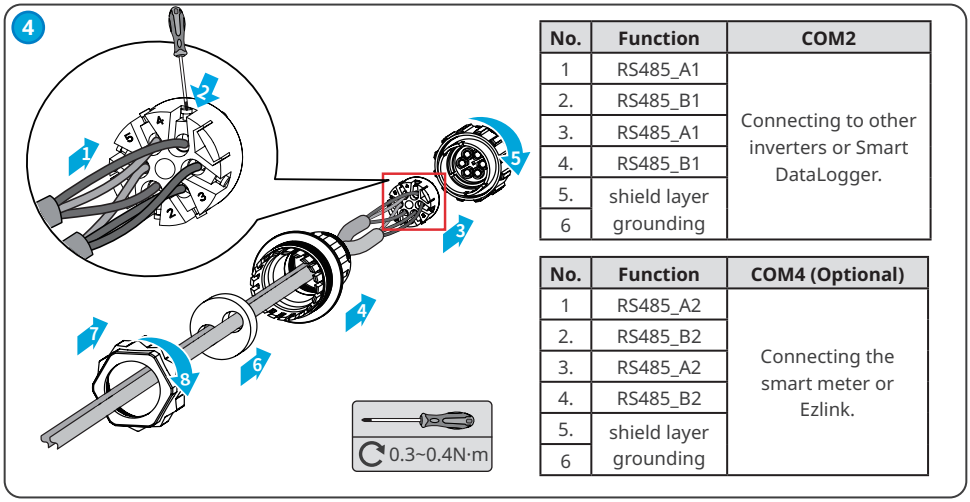

No.	Function	COM2
1	RS485_A1	Connecting to other inverters or Smart DataLogger.
2.	RS485_B1	
3.	RS485_A1	
4.	RS485_B1	
5.	shield layer grounding	
6		

No.	Function	COM4 (Optional)
1	RS485_A2	Connecting the smart meter or Ezlink.
2.	RS485_B2	
3.	RS485_A2	
4.	RS485_B2	
5.	shield layer grounding	
6		

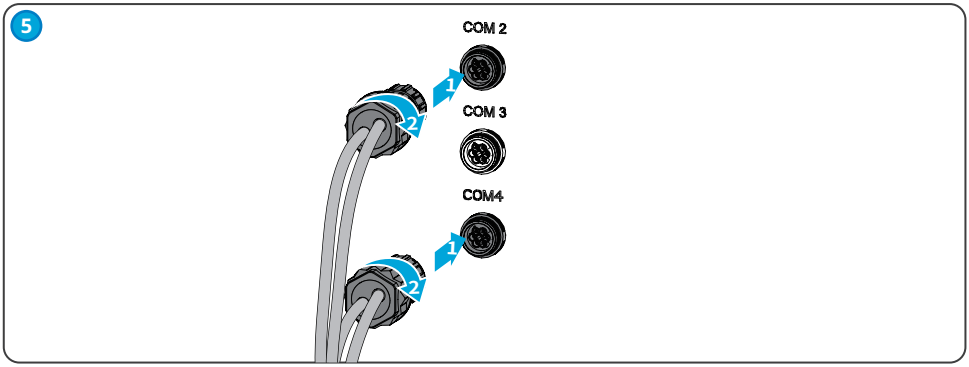

6.5.2 Connecting the Remote Shutdown Communication Cable (Optional)

Remote Shutdown networking scenario

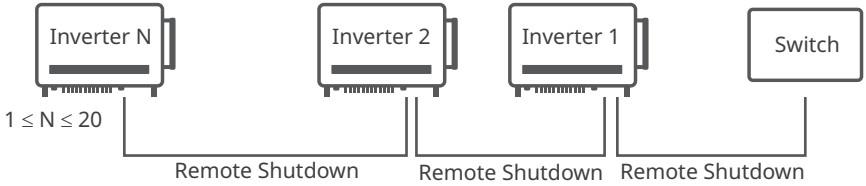

Connecting the Remote Shutdown Communication Cable

Communication Type	COM Port	Port Definition	Function Description
Remote Shutdown	COM3	1: DI+ 2: DI- 3: Reserved 4: Reserved 5: DI+ 6: DI-	The remote shutdown port is reserved to meet the safety regulations in Europe. Related devices have to be prepared by customers.

NOTICE
Connect the Remote Shutdown cable using a 6PIN communication terminal as follows.

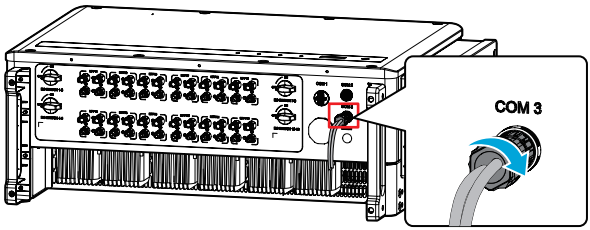

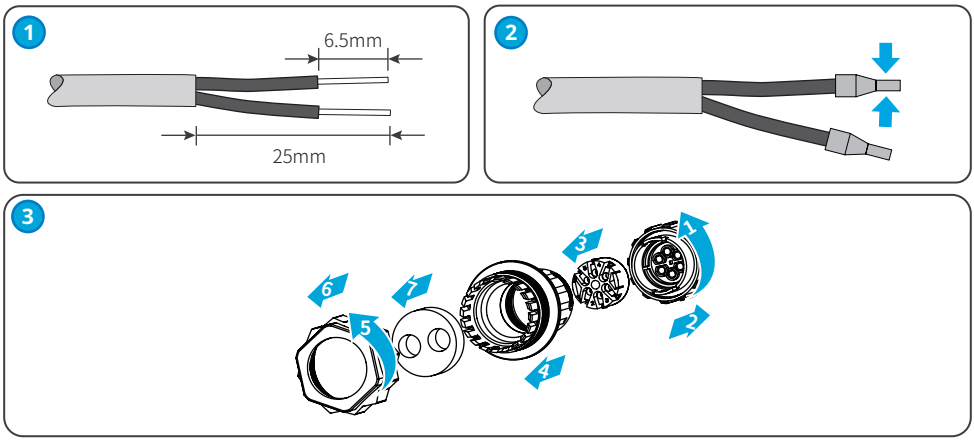

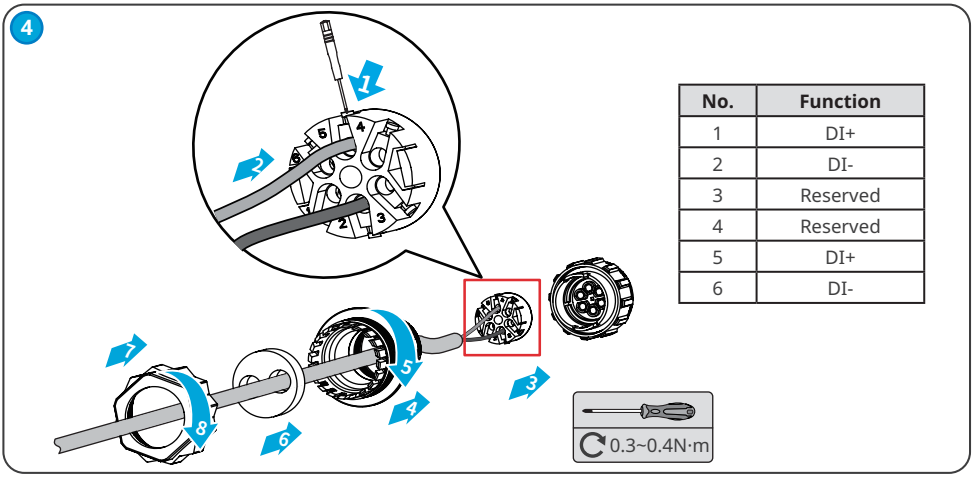

No.	Function
1	DI+
2	DI-
3	Reserved
4	Reserved
5	DI+
6	DI-

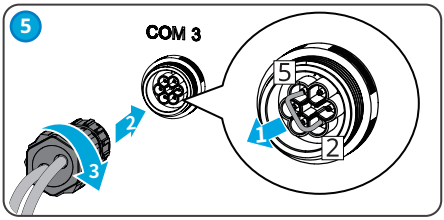

NOTICE

The Remote Shutdown communication port is installed with a short circuit wire. Remove the short circuit wire and keep it properly when enabling the Remote Shutdown function. Install the short circuit wire in PIN2 and PIN5 of the COM3 port when disabling the Remote Shutdown function.

6.5.3 Connecting DRED Communication Cable (optional)

COM Port	Communication Type	Port Definition	Function Description
COM3	DRED	1: COM/DRM0 2: DRM4/8 3: DRM3/7 4: DRM2/6 5: DRM1/5 6: REFGEN	DRED (Demand Response Enabling Device): The inverter provides a DRM signal control port to meet the Australian DRM certification requirements.

DRED Circuit

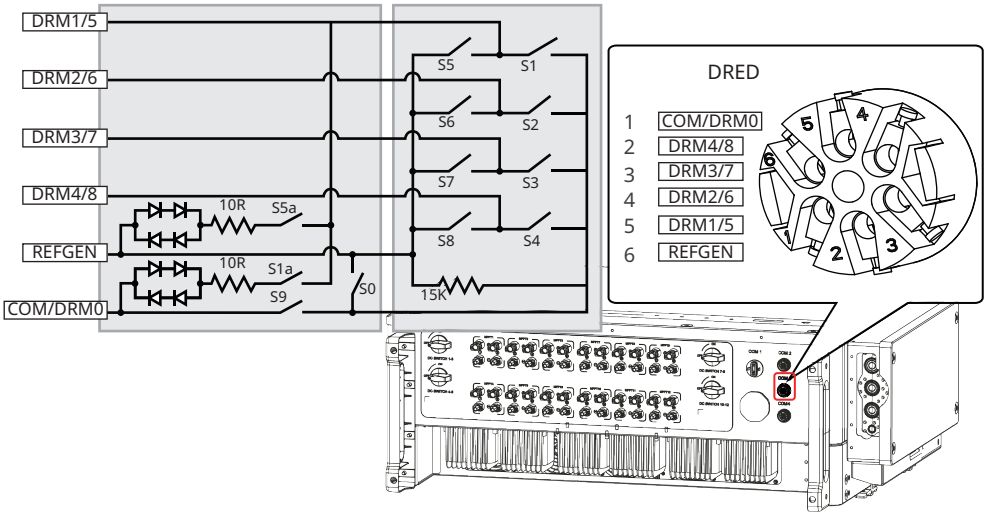

Multiple Inverter DRED

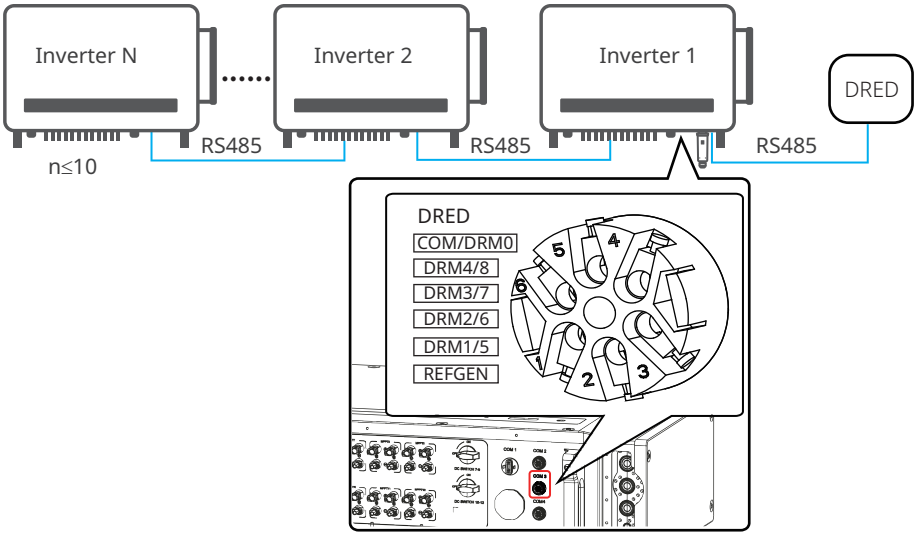

Connecting communication cable

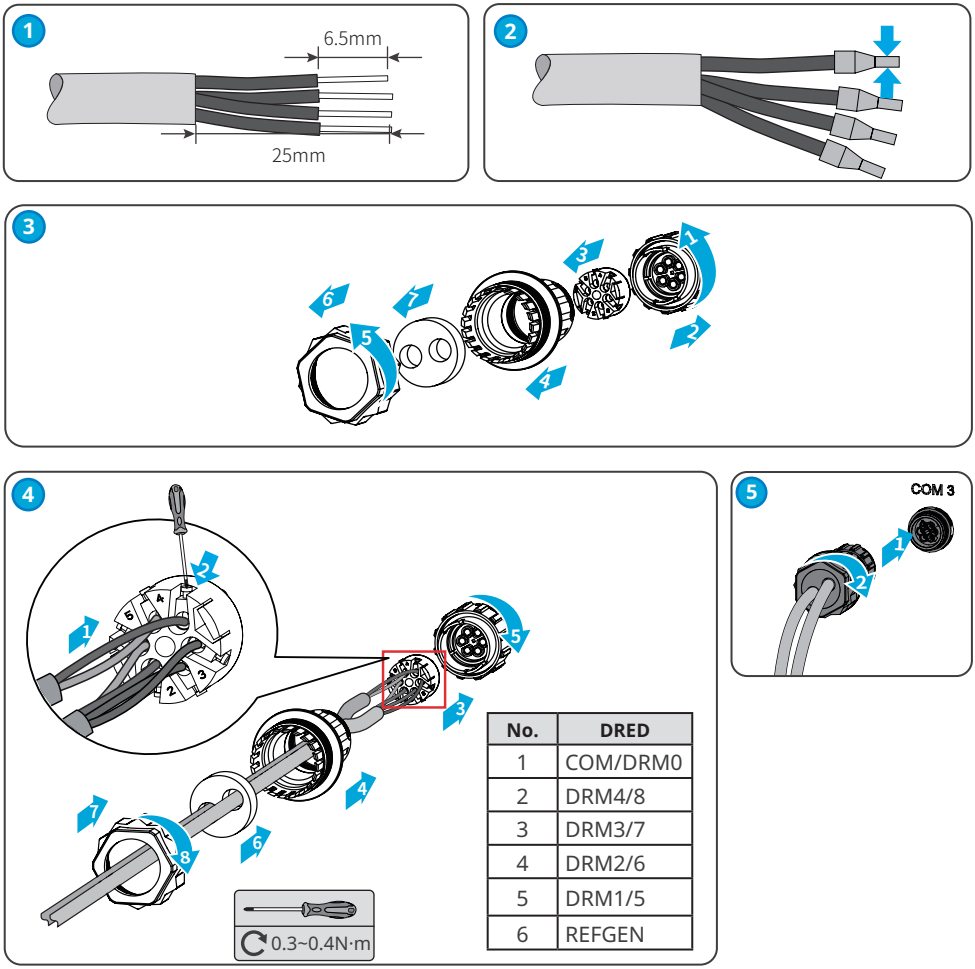

No.	DRED
1	COM/DRM0
2	DRM4/8
3	DRM3/7
4	DRM2/6
5	DRM1/5
6	REFGEN

6.5.4 Installing the Communication Module (optional)

Plug a communication module into the inverter to establish a connection between the inverter and the smartphone or web pages. The communication module can be a WiFi module, or 4G module. Set inverter parameters, check running information and fault information, and observe system status in time via the smartphone or web pages.

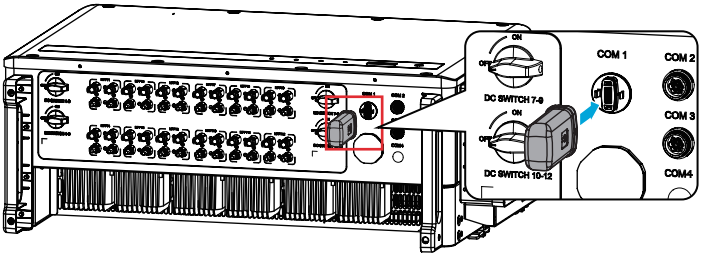

NOTICE

Refer to the delivered communication module user manual to get more introduction to the module. For more detailed information, visit https://en.goodwe.com/.

6.5.5 Installing PV Protection Cover (Optional)

NOTICE

- After conncect the inverter, you can install a PV protective cover to protect the DC terminals (optionally).
- Please contact the distributor or after-sales service center to buy the outside fuse if the fuse is needed.
- If you have install an external fuse to the DC terminal of the inverter, you need to provide a PV protective cover of appropriate size by yourself.

Step 1: Put the protective cover horizontally on the wall or bracket, and use a marker to mark the drilling position.
Step 2: Drill holes to a depth of 65mm using the hammer drill. The diameter of the drill bit should be 13mm.
Step 3: Fix the protective cover to the wall or bracket with expansion screws or combination bolts.

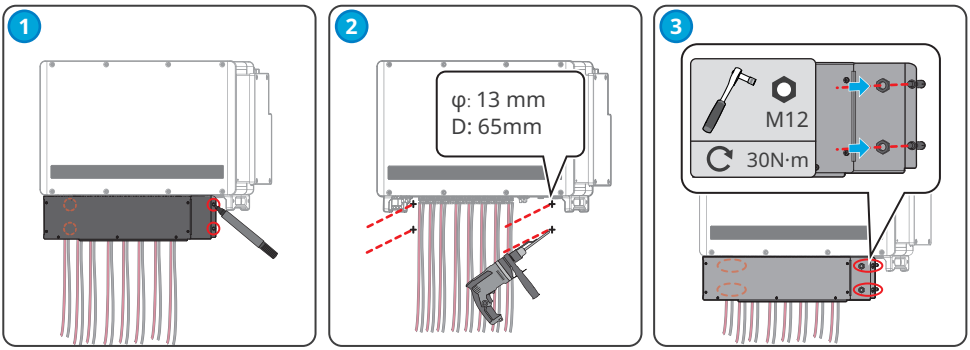

7 Equipment Commissioning

7.1 Check Items before Switching Power ON

No.	Check Item
1	The inverter is firmly installed in a clean place where is well-ventilated and easy to operate.
2	The PE cable, DC input cable, AC output cable, and communication cable are connected correctly and securely.
3	Cable ties are routed properly and evenly, and no burrs.
4	Unused ports and terminals are sealed.
5	The voltage and frequency at the connection point meet the on-grid requirements.

7.2 Power On

Step 1 Turn on the AC switch between the inverter and the utility grid.

Step 2 Turn on the DC switch of the inverter.

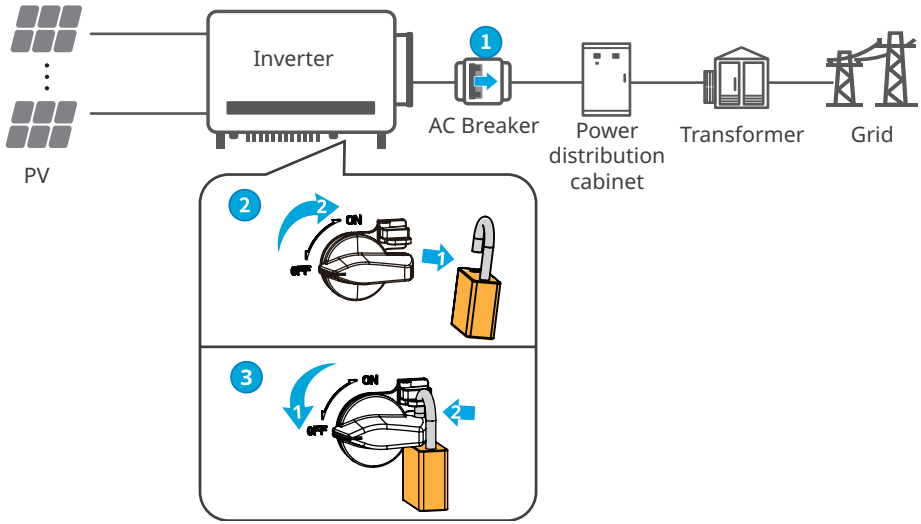

The DC switch locking hole is for Australia only.

Power ON

Turn on 1 → 2

Power OFF

Turn off 1 → 3

8 System Commissioning

8.1 Indicators and Button

Model without LCD

Model with LCD

Indicator	Status	Description
		ON = EQUIPMENT POWER ON
		OFF = EQUIPMENT POWER OFF
		ON = THE INVERTER IS FEEDING POWER
		OFF = THE INVERTER IS NOT FEEDING POWER
		SINGLE SLOW FLASH = SELF CHECK BEFORE CONNECTING TO THE GRID
		SINGLE FLASH = CONNECTING TO THE GRID
		ON = WIRELESS IS CONNECTED/ACTIVE
		BLINK 1 = WIRELESS SYSTEM IS RESETTING
		BLINK 2 = WIRELESS ROUTER NOT CONNECTED
		BLINK 4 = WIRELESS SERVER PROBLEM
		BLINK = RS485 IS CONNECTED
		OFF = WIRELESS IS NOT ACTIVE
		ON = A FAULT HAS OCCURRED
		OFF = NO FAULT

8.2 Setting Inverter Parameters via LCD

NOTICE

- The screen shots are for reference only. The actual display may differ.
- The name, range, and default value of the parameters is subject to change or adjust. The actual display prevails.
- the power parameters should be set by professionals to prevent the generating capacity from being influenced by wrong parameters.

LCD Button Description

Stop pressing the button for a period in any page, the LCD will get dark and go back to the initial page, which means the parameter in that page has been saved successfully.

LCD Menu Introduction

This part describes the menu structure, allowing you view inverter information and set parameters more conveniently.

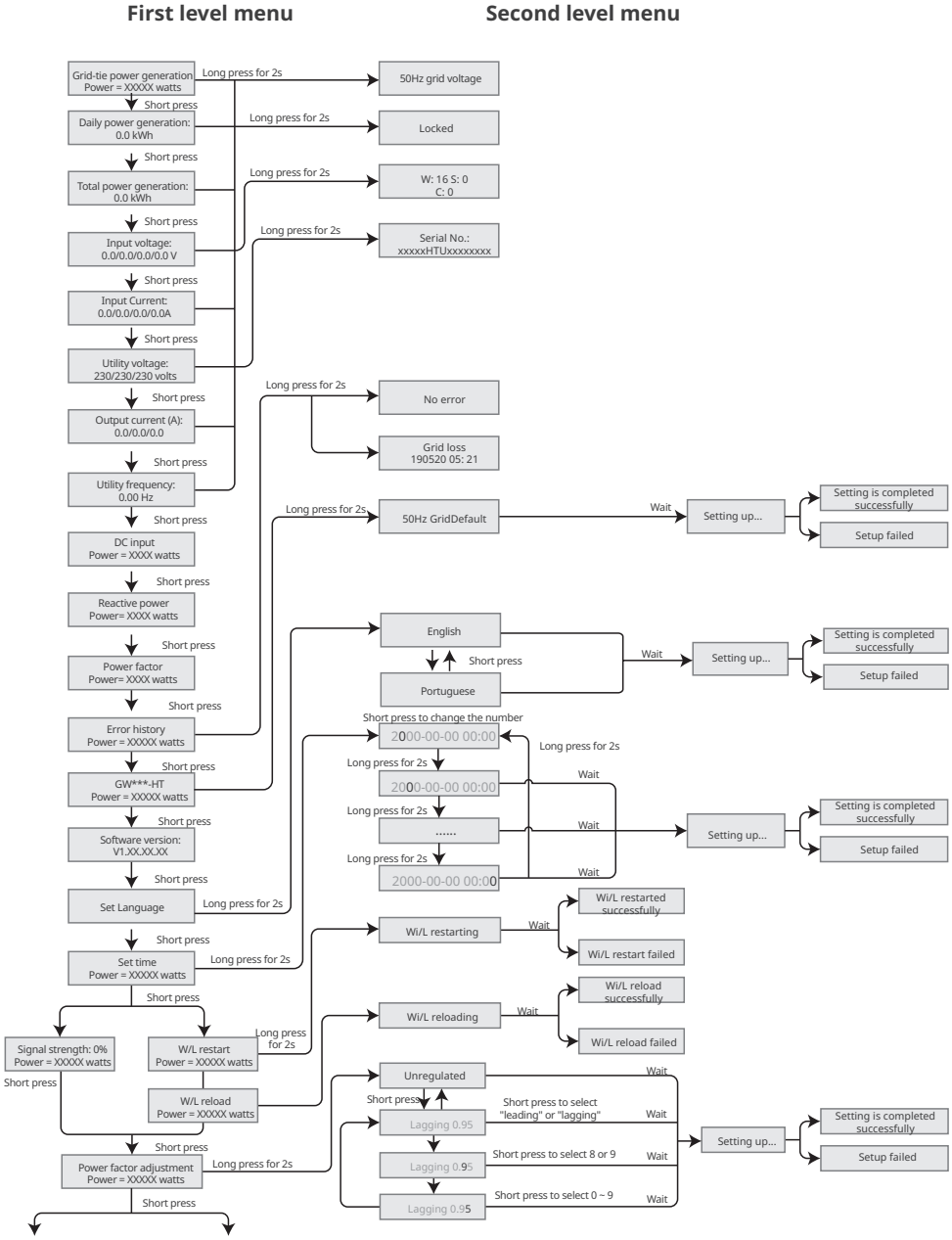

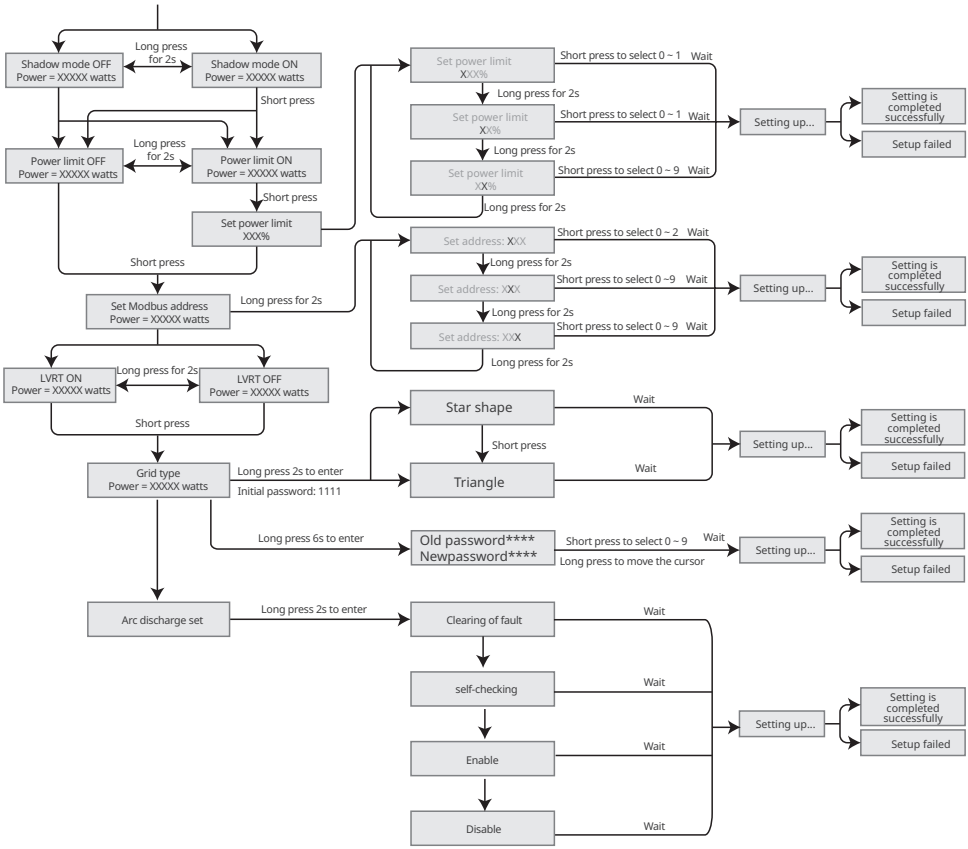
Shadow mode OFF
Power = XXXXX watts
Long press for 2s
Shadow mode ON
Power = XXXXX watts
Short press
Power limit OFF
Power = XXXXX watts
Long press for 2s
Power limit ON
Power = XXXXX watts
Short press
Set power limit
XXX%
Short press
Set Modbus address
Power = XXXXX watts
Long press for 2s
LVRT ON
Power = XXXXX watts
Long press for 2s
LVRT OFF
Power = XXXXX watts
Short press
Grid type
Power = XXXXX watts
Long press 2s to enter
Initial password: 1111
Long press 6s to enter
Arc discharge set
Long press 2s to enter
Set power limit
XXX%
Short press to select 0 ~ 1
Wait
Long press for 2s
Set power limit
XX%
Short press to select 0 ~ 1
Wait
Long press for 2s
Set power limit
XX%
Short press to select 0 ~ 9
Wait
Long press for 2s
Setting up...
Setting is completed successfully
Setup failed
Set address: XXX
Short press to select 0 ~ 2
Wait
Long press for 2s
Set address: XXX
Short press to select 0 ~9
Wait
Long press for 2s
Set address: XXX
Short press to select 0 ~ 9
Wait
Long press for 2s
Setting up...
Setting is completed successfully
Setup failed
Star shape
Wait
Short press
Triangle
Wait
Setting up...
Setting is completed successfully
Setup failed
Old password****
Newpassword****
Short press to select 0 ~ 9
Wait
Long press to move the cursor
Setting up...
Setting is completed successfully
Setup failed
Clearing of fault
Wait
self-checking
Wait
Enable
Wait
Disable
Wait
Setting up...
Setting is completed successfully
Setup failed

8.3 Setting Inverter Parameters via App

SolarGo is an application used to communicate with the inverter via Bluetooth module, WiFi module, Wi-Fi/LAN module, or 4G module. Commonly used functions:

1. Check the operating data, software version, alarms of the inverter, etc.
2. Set grid parameters and communication parameters of the inverter.
3. Maintain the equipment.

For more details, refer to the SolarGo APP User Manual. Scan the QR code or visit https://en.goodwe.com/Ftp/EN/Downloads/User%20Manual/GW_SolarGo_User%20Manual-EN.pdf to get the user manual.

SolarGo App

SolarGo App User Manual

8.4 Monitoring via SEMS Portal

SEMS Portal is an monitoring platform used to manage organizations/users, add plants, and monitor plant status.
For more details, refer to the SEMS Portal User Manual. Scan the QR code or visit https://en.goodwe.com/Ftp/EN/Downloads/User%20Manual/GW_SEMS%20Portal-User%20Manual-EN.pdf to get the user manual.

SEMS Portal

SEMS Portal User Manual

9 Maintenance

9.1 Power Off the Inverter

DANGER

- Power off the inverter before operations and maintenance. Otherwise, the inverter may be damaged or electric shocks may occur.
- Delayed discharge. Wait until the components are discharged after power off.

Step 1 Issue a command to the inverter for halting the grid via SolarGo APP.
Step 2 Turn off the AC switch between the inverter and the utility grid.
Step 3 Turn off the DC switch of the inverter.

9.2 Removing the Inverter

WARNING

- Make sure that the inverter is powered off.
- Wear proper PPE before any operations.

Step 1 Disconnect all the cables, including DC cables, AC cables, communication cables, the communication module, and PE cables.
Step 2 Handle or hoist the inverter to take it down from the wall or the bracket.
Step 3 Store the inverter properly. If the inverter needs to be used later, ensure that the storage conditions meet the requirements.

9.3 Disposing of the Inverter

If the inverter cannot work any more, dispose of it according to the local disposal requirements for electrical equipment waste. Do not dispose of it as household waste.

9.4 Troubleshooting

Perform troubleshooting according to the following methods. Contact the after-sales service if these methods do not work.
Collect the information below before contacting the after-sales service, so tha the problems can be solved quickly.

1. Inverter information like serial number, software version, installation date, fault time, fault frequency, etc.
2. Installation environment, including weather conditions, whether the PV modules are sheltered or shadowed, etc. It is recommended to provide some photos and videos to assist in analyzing the problem.
3. Utility grid situation.

No.	Fault	Cause	Solutions
1	SPI Comm Fail	1. The chip is not powered on. 2. The chip program version is wrong.	Disconnect the AC output switch and DC input switch, then connect them 5 minutes later. Contact the dealer or the after-sales service if the problem persists.
2	EEPROM Fail	The internal memory Flash is abnormal.	
3	Fac Fail	Utility grid exception. The actual grid frequency change rate does not meet the requirement of the local grid standard.	1. If the problem occurs occasionally, the utility grid may be abnormal temporarily. The inverter will recover automatically after detecting that the utility grid is normal. 2. If the problem occurs frequently, check whether the grid frequency is within the permissible range. • Contact the local power company if the grid frequency exceeds the permissible range. • Contact the dealer or the after-sales service if the grid frequency is within the permissible range.
4	DC-SPD	The inverter is struck by lightning.	1. Improve the lightning protection facilities around the inverter. 2. Disconnect the AC output switch and DC input switch, then connect them 5 minutes later. Contact the dealer or the after-sales service if the problem persists.
5	Night DCSPS Fault	1. Temporary abnormality is caused by environmental factors. 2. Internal components of the inverter are damaged.	Disconnect the AC output switch and DC input switch, then connect them 5 minutes later. Contact the dealer or the after-sales service if the problem persists.

No.	Fault	Cause	Solutions
6	Relay Fail	1. The relay is abnormal or short-circuited. 2. The control circuit is abnormal. 3. The AC cable connection is abnormal, like a virtual connection or short circuit.	Disconnect the AC output switch and DC input switch, then connect them 5 minutes later. Contact the dealer or the after-sales service if the problem persists.
7	BUS-start Fail	1. The output power of the PV string is too low. 2. The control circuit is abnormal.	Disconnect the AC output switch and DC input switch, then connect them 5 minutes later. Contact the dealer or the after-sales service if the problem persists.
8	OVGRFault	1. The output voltage value of the PV string is lower than the minimum DC input voltage value of the inverter. 2. The control circuit is abnormal.	Disconnect the AC output switch and DC input switch, then connect them 5 minutes later. Contact the dealer or the after-sales service if the problem persists.
9	Pv Reverse Fault	The PV string is connected reversely.	Check whether the PVstrings is connected reversely.
10	Night BUS Fault	1. Utility grid power fails. 2. The AC cable is disconnected, or the AC breaker is off.	Disconnect the AC output switch and DC input switch, then connect them 5 minutes later. Contact the dealer or the after-sales service if the problem persists.
11	CPLD Error	1. Temporary abnormality is caused by environmental factors. 2. Internal components of the inverter are damaged.	Disconnect the AC output switch and DC input switch, then connect them 5 minutes later. Contact the dealer or the after-sales service if the problem persists.

No.	Fault	Cause	Solutions
12	DCi High	The machine detects that the DC component of the internal output current exceeds the normal range.	Please contact your dealer or after-sale service.
13	ISO Fail	1. The PV system is short-circuited to the ground. 2. The PV system is in a moist environment and the circuit is not well insulated to the ground.	1. Check whether the PV input cables are broken. 2. Check whether the module frames and the metal bracket are securely grounded. 3. Check whether the AC side is properly grounded Inverters sold in Australia and New Zealand will also alarm as following when Isolation Fail occurs. 1. The buzzer in the inverter will sound for 1minute. If the problem persists, the buzzer willsound every 30 min. 2. After adding the inverter to SEMS Portal, the alarm information will be emailed to the customers via SEMS Portal.
14	Vac Failure	The utility grid voltage is out of the allowed range.	1. Make sure that the grid voltage is within the allowed range. 2. Make sure that the phase sequence of the AC cables are connected correctly, and the neutral wire and PE cable are connected properly and firmly.
15	ExFan Failure	1. The fan power supply is abnormal. 2. Mechanical exception. 3. The fan is aging and damaged.	Disconnect the AC output switch and DC input switch, then connect them 5 minutes later. Contact the dealer or the after-sales service if the problem persists.
16	GFCI Chk Fail	The sampling of the GFCI HCT is abnormal.	Disconnect the AC output switch and DC input switch, then connect them 5 minutes later. Contact the dealer or the after-sales service if the problem persists.
17	AFCI Fault	1. The DC string terminal is not firmly connected. 2. The DC cable is broken.	Please check whether the wirings of the PV modules are correct according to the requirements in the user manual.

No.	Fault	Cause	Solutions
18	Over Temperature	1. The inverter is installed in a place with poor ventilation. 2. The ambient temperature exceeds 60℃. 3. A fault occurs in the internal fan of the inverter.	1. Check the ventilation and the ambient temperature at the installation point. 2. If the ventilation is poor or the ambient temperature is too high, improve the ventilation and heat dissipation. 3. Contact the dealer or after-sales service if both the ventilation and the ambient temperature are normal.
19	InFan Fail	1. The fan power supply is abnormal. 2. Mechanical exception. 3. The fan is aging and damaged.	Disconnect the AC output switch and DC input switch, then connect them 5 minutes later. Contact the dealer or the after-sales service if the problem persists.
20	DC Bus High	1. The PV voltage is too high. 2. The sampling of the inverter BUS voltage is abnormal.	Disconnect the AC output switch and DC input switch, then connect them 5 minutes later. Contact the dealer or the after-sales service if the problem persists.
21	Gnd I Fail	The input insulation impedance to the ground decreases when the inverter is operating.	1. Check whether the working environment of the inverter meets the requirements. For example, the fault may occur due to high humidity on rainy days 2. Make sure that the components are properly grounded and the AC side is properly grounded.
22	Utility Loss	1. Utility grid power fails. 2. The AC cable is disconnected, or the AC breaker is off.	1. The alarm is automatically cleared after the grid power supply is restored. 2. Check whether the AC cable is connected and the AC breaker is on.
23	AC HCT Fail	The sampling of the AC HCT is abnormal.	Disconnect the AC output switch and DC input switch, then connect them 5 minutes later. Contact the dealer or the after-sales service if the problem persists.
24	Relay Fail	1. The relay is abnormal or short-circuited. 2. The control circuit is abnormal.	Disconnect the AC output switch and DC input switch, then connect them 5 minutes later. Contact the dealer or the after-sales service if the problem persists.

No.	Fault	Cause	Solutions
25	GFCI Chk Fail	The sampling of the GFCI HCT is abnormal.	Disconnect the AC output switch and DC input switch, then connect them 5 minutes later. Contact the dealer or the after-sales service if the problem persists.
26	SPD Failure	The inverter is struck by lightning.	3. Improve the lightning protection facilities around the inverter.Disconnect the AC output switch and DC input switch, then connect them 5 minutes later. Contact the dealer or the after-sales service if the problem persists.
27	DC Switch Fail	The tripping times of the DC trip switch exceeds the limit.	Please contact your dealer or after-sale service.
28	Ref-V Chek Fail	The reference circuit is faulty.	Disconnect the AC output switch and DC input switch, then connect them 5 minutes later. Contact the dealer or the after-sales service if the problem persists.
29	HCT Chk Fail	The AC sensor is abnormal in sampling.	
30	PID Error	1. The system grounding is abnormal. 2. The PID module is abnormal.	1. Check whether the DC connecting and AC connecting cables are abnormal. 2. Check whether the PID module is abnormal. 3. Contact your dealer or after-sales service.
31	CPLD Error	1. Temporary abnormality is caused by environmental factors. 2. Internal components of the inverter are damaged.	Disconnect the AC output switch and DC input switch, then connect them 5 minutes later. Contact the dealer or the after-sales service if the problem persists.
32	PV over Curr	1. The PV module configuration is not reasonable. 2. The hardware is damaged.	Disconnect the AC output switch and DC input switch, then connect them 5 minutes later. Contact the dealer or the after-sales service if the problem persists.
34	PV soft OverCurr		
35	Model Error	1. Temporary abnormality is caused by environmental factors. 2. Internal components of the inverter are damaged.	Disconnect the AC output switch and DC input switch, then connect them 5 minutes later. Contact the dealer or the after-sales service if the problem persists.

No.	Fault	Cause	Solutions
36	Pv Short Failure	The hardware is abnormal.	Please contact your dealer or after-sale service.
37	BUS-start Fail	1. The output power of the PV string is too low. 2. The control circuit is abnormal.	Disconnect the AC output switch and DC input switch, then connect them 5 minutes later. Contact the dealer or the after-sales service if the problem persists.
38	PV Over Voltage	Excess PV modules are connected in the series, and the open-circuit voltage is higher than the operating voltage.	1. Check whether the PV string input voltage consistent with the value displayed on the LCD. 2. Check whether the PV string voltage meets the maximum input voltage requirements.
39	PV Voltage Low	Sun light is weak or changing abnormally.	1. If the problem occurs occasionally, the reason might be abnormal sun light. The inverter will recover automatically without manual intervention. 2. If the problem occurs frequently, contact the dealer or the after-sales service.
40	PV HCT Fail	1. Temporary abnormality is caused by environmental factors. 2. Internal components of the inverter are damaged.	Disconnect the AC output switch and DC input switch, then connect them 5 minutes later. Contact the dealer or the after-sales service if the problem persists.
41	PV over Curr		Disconnect the AC output switch and DC input switch, then connect them 5 minutes later. Contact the dealer or the after-sales service if the problem persists.
42	Bus Unbalance	1. The sampling circuit of the relay is abnormal. 2. Abnormal hardwares	Disconnect the AC output switch and DC input switch, then connect them 5 minutes later. Contact the dealer or the after-sales service if the problem persists.

9.5 Routine Maintenance

DANGER

Power off the inverter before operations and maintenance. Otherwise, the inverter may be damaged or electric shocks may occur.

Maintaining Item	Maintaining Method	Maintaining Period
System Clean	Check the heat sink, air intake, and air outlet for foreign matter or dust.	Once 6-12 months
Fan	Check the fan for proper working status, low noise, and intact appearance.	Once a year
DC Switch	Turn the DC switch on and off ten consecutive times to make sure that it is working properly.	Once a year
Electrical Connection	Check whether the cables are securely connected. Check whether the cables are broken, or whether there is any exposed copper core.	Once 6-12 months
Sealing	Check whether all the terminals and ports are properly sealed. Reseal the cable hole if it is not sealed or too big.	Once a year
THDi Test	For Australia requirements, in the THDi test, there should add Zref between inverter and mains. Zref: Zmax or Zref (phase current>16A) Zref: L: 0.24 Ω + j0.15 Ω; N: 0.16 Ω + j0.10 Ω (phase current>16A, <21.7A) Zref: L: 0.15 Ω + j0.15 Ω; N: 0.1 Ω + j0.1 Ω (phase current>21.7A, <75A) Zref: ≥5% Un/Irated+j5% Un/Irated (phase current>75A)	As needed

10 Technical Parameters

Technical Data	GW100K-HT	GW110K-HT	GW120K-HT	GW136K-HTH
Input				
Max.Input Power (kW)	150	165	180	205
Max.Input Voltage (V)*3	1100	1100	1100	1100
MPPT Operating Voltage Range (V)	180~1000*4	180~1000*4	180~1000*4	180~1000*4
MPPT Voltage Range at Nominal Power (V)	500~850	500~850	500~850	500~850
Start-up Voltage (V)	200	200	200	200
Nominal Input Voltage (V)	600	600	600	750
Max. Input Current per MPPT (A)	30	30	30	30
Max. Short Circuit Current per MPPT (A)	45	45	45	45
Max. Backfeed Current to The Array (A)	0	0	0	0
Number of MPPT Trackers	10	12	12	12
Number of Strings per MPPT	2	2	2	2
Output				
Nominal Output Power (kW)	100*1	110	120	136
Nominal Output Apparent Power (kVA)	100*1	110	120	136
Max. AC Active Power (kW)	110*1	121	132	150
Max. AC Apparent Power (kVA)	110*1	121	132	150
Nominal Power at 40°C(kW) (Only for Brazil)	100	110	120	136
Max Power at 40°C (Including AC Overload) (kW) (Only for Brazil)	110	121@400V	132@400V	150
Nominal Output Voltage (V)	400, 3L/N/PE or 3L/PE*2			500 , 3L/PE
Output Voltage Range (V)	320~440			425~550
Nominal AC Grid Frequency (Hz)	50 / 60	50 / 60	50 / 60	50 / 60
AC Grid Frequency Range (Hz)	45~55/55~65			
Max. Output Current (A)	167.0	175.5	191.3	173.2
Max. Output Fault Current (Peak and Duration) (A)	364@5μs	364@5μs	364@5μs	364@5μs
Inrush Current (Peak and Duration) (A)	120@1μs	120@1μs	120@1μs	120@1μs
Nominal Output Current (A)	144.3	158.8	173.2	157.0

Technical Data	GW100K-HT	GW110K-HT	GW120K-HT	GW136K-HTH
Power Factor	~1 (Adjustable from 0.8 leading to 0.8 lagging)			
Max. Total Harmonic Distortion	<3%	<3%	<3%	<3%
Maximum Output Overcurrent Protection (A)	340	340	340	340
Efficiency				
Max. Efficiency	98.6%	98.6%	98.6%	99.0%
European Efficiency	98.3%	98.3%	98.3%	98.5%
Protection				
PV String Current Monitoring	Integrated			
Internal Humidity Monitoring	Integrated			
PV Insulation Resistance Detection	Integrated			
Residual Current Monitoring	Integrated			
PV Reverse Polarity Protection	Integrated			
Anti-islanding Protection	Integrated			
AC Overcurrent Protection	Integrated			
AC Short Circuit Protection	Integrated			
AC Overvoltage Protection	Integrated			
DC Switch	Integrated			
DC Surge Protection	Type II			
AC Surge Protection	Type II			
AFCI	Optional			
Remote Shutdown	Optional			
PID Recovery	Optional			
General Data				
Operating Temperature Range (℃)	-30 ~ 60			
Relative Humidity	0~100%	0~100%	0~100%	0~100%
Max. Operating Altitude (m)	4000			
Cooling Method	Smart Fan Cooling			
User Interface	LED, LCD (Optional) , WLAN+APP			
Communication	RS485, WiFi or 4G (Optional)			RS485, WiFi or 4G or PLC (Optional)
Communication Protocols	Modbus-RTU (SunSpec Compliant)			

Technical Data	GW100K-HT	GW110K-HT	GW120K-HT	GW136K-HTH
Weight (kg)	93.5	98.5	98.5	98.5
Dimension (W×H×Dmm)	1008× 678× 343			
Noise Emission (dB)	<70	<70	<70	<70
Topology	Non-isolated			
Self-consumption at Night (W)	< 2			
Ingress Protection Rating	IP66			
Anti-corrosion Class	C5 (Optional)			
DC Connector	MC4 (4~6mm^2)			
AC Connector	OT/DT terminal (Max. 300mm^2)			
Environmental Category	4K4H			
Pollution Degree	III			
Overvoltage Category	DCII / ACIII			
Protective Class	I			
The Decisive Voltage Class (DVC)	PV: C AC: C com: A			
Active Anti-islanding Method	AQDPF			
Country of Manufacture (only for Australian market)	China			

NOTE:
*1: For Australia is 99.99kW/kVA
*2: For Brazil Nominal Output Voltage (V): 380, 3L/N/PE or 3L/PE
*3: When the input voltage is between 1000V and 1100V, the inverter enters the waiting mode. When the voltage returns to 180V to 1000V, the inverter will resume normal operation.

Technical Data	GW73KLV-HT	GW75K-HT	GW80K-HT
Input			
Max.Input Power (kW)	112.5	112.5	120
Max.Input Voltage (V)	800	1100*2	1100*2
MPPT Operating Voltage Range (V)	180~650	180~1000	180~1000
MPPT Voltage Range at Nominal Power (V)	250~650	500~850	500~850
Start-up Voltage (V)	200	200	200
Nominal Input Voltage (V)	370	600	600
Max. Input Current per MPPT (A)	30	30	30
Max. Short Circuit Current per MPPT (A)	45	45	45
Max. Backfeed Current to The Array (A)	0	0	0
Number of MPPT	12	10	10
Number of Strings per MPPT	2	2	2
Output			
Nominal Output Power (kW)	73	75	80
Nominal Output Apparent Power (kVA)	73	75	80
Max. AC Active Power (kW)	69@208V; 73@220V; 75@230V	75	88
Max. AC Apparent Power (kVA)	75	75	88
Nominal Power at 40°C (kW)(Only for Brazil)	73	75	80
Max Power at 40°C (Including AC Overload) (kW) (Only for Brazil)	73	75	88
Nominal Output Voltage (V)	220, 3L/N/PE or 3L/PE	380/400, 3L/N/PE or 3L/PE*1	
Output Voltage Range (V)	187~242	320~440	
Nominal AC Grid Frequency (Hz)	50/60	50/60	50/60
AC Grid Frequency Range (Hz)	45~55/55~65		
Max. Output Current (A)	192.0	125.3	134.0
Max. Output Fault Current (peak and duration) (A)	364@5μs	364@5μs	364@5μs
Inrush Current (peak and duration) (A)	120@1μs	120@1μs	120@1μs
Nominal Output Current (A)	191.6	114.0/108.3	121.6/115.5

Technical Data	GW73KLV-HT	GW75K-HT	GW80K-HT
Output Power Factor	~1 (Adjustable from 0.8 leading to 0.8 lagging)		
Max. Total Harmonic Distortion	<3%	<3%	<3%
Maximum Output Overcurrent Protection (A)	340	340	340
Efficiency			
Max. Efficiency	98.4%	98.6%	98.6%
European Efficiency	98.1%	98.3%	98.3%
Protection			
PV String Current Monitoring	Integrated		
Internal Humidity Monitoring	Integrated		
PV Insulation Resistance Detection	Integrated		
Residual Current Monitoring	Integrated		
PV Reverse Polarity Protection	Integrated		
Anti-islanding Protection	Integrated		
AC Overcurrent Protection	Integrated		
AC Short Circuit Protection	Integrated		
AC Overvoltage Protection	Integrated		
DC Switch	Integrated		
DC Surge Protection	Type II		
AC Surge Protection	Type II		
AFCI	Optional		
Remote Shutdown	Optional		
PID Recovery	Optional		
PID Recovery			
Operating Temperature Range (℃)	-30 ~ 60 (60 °C for outdoor unconditioned with solar effects.)		
Relative Humidity	0~100%		
Max. Operating Altitude (m)	5000 (>4000 derating)		
Cooling Method	Smart Fan Cooling		
Display	LED, LCD (Optional) ,WLAN+APP		
Communication	RS485, WiFi or 4G (Optional)		
Communication protocols	Modbus-RTU (SunSpec Compliant)		
Weight (Kg)	98.5	93.5	93.5
Dimension (W×H×Dmm)	1008× 678× 343		

Technical Data	GW73KLV-HT	GW75K-HT	GW80K-HT
Noise Emission (dB)	<70	<70	<70
Topology	Non-isolated		
Self-consumption at Night (W)	<2		
Ingress Protection Rating	IP66		
Anti-corrosion Class	C5 (Optional)	C4	
DC Connector	MC4 (4~6mm^2)		
AC Connector	OT/DT terminal (Max. 300mm^2)		
Environmental Category	4K4H		
Pollution Degree	III		
Overvoltage Category	DC II / AC III		
Protective Class	I		
The Decisive Voltage Class (DVC)	PV: C AC: C com: A		
Active Anti-islanding Method	AQDPF+AFDPF		
Country of Manufacture	China		

NOTE:
*1: For Brazil Nominal Output Voltage (V): 380, 3L/N/PE or 3L/PE
*2: When the input voltage is between 1000V and 1100V, the inverter enters the waiting mode. When the voltage returns to 180V to 1000V, the inverter will resume normal operation.

11 Term Explanation

Overvoltage category definition
Category I: Applies to equipment connected to a circuit where measures have been taken to reduce transient overvoltage to a low level.
Category II: Applies to equipment not permanently connected to the installation. Examples are appliances, portables tools and other plug-connected equipment.
Category III: Applies to a fixed equipment downstream, including the main distribution board. Examples are switchgear and other equipment in an industrial installation.
Category IV: Applies to equipment permanently connected at the origin of an installation (upstream of the main distribution board). Examples are electricity meters, primary over-current protection equipment and other equipment connected directly to outdoor open lines.

Moisture location category definition

Parameters	Level		
	3K3	4K2	4K4H
Moisture Parameters	0 - +40℃	-33 - +40℃	-33 - +40℃
Temperature Range	5% - 85%	15% - 100%	4% - 100%

Environment category definition
Outdoor: Ambient Temperature: -25~+60℃, applied to Pollution Degree 3 environment.
Indoor Unconditioned: Ambient Temperature: -25~+40℃, applied to Pollution Degree 3 environment.
Indoor conditioned: Ambient Temperature: 0~+40℃, applied to Pollution Degree 2 **environment.Outdoor:** Ambient Temperature: 0~+40℃, applied to Pollution Degree 2 environment.

Pollution degree definition
Pollution Degree I: No pollution or only dry, non-conductive pollution occurs. The pollution has no influence.
Pollution Degree II: Normally only non-conductive pollution occurs. Occasionally, however, a temporary conductivity caused by condensation must be expected.
Pollution Degree III: Conductive pollution occurs, or dry. non-conductive pollution occurs, which becomes conductive due to condensation, which is expected.
Pollution Degree IV: Persistent conductive pollution occurs, for example, the pollution caused by conductive dust, rain or snow.

GoodWe Website

GoodWe Technologies Co., Ltd.

No. 90 Zijin Rd., New District, Suzhou, 215011, China

www.goodwe.com

service@goodwe.com

Local Contacts